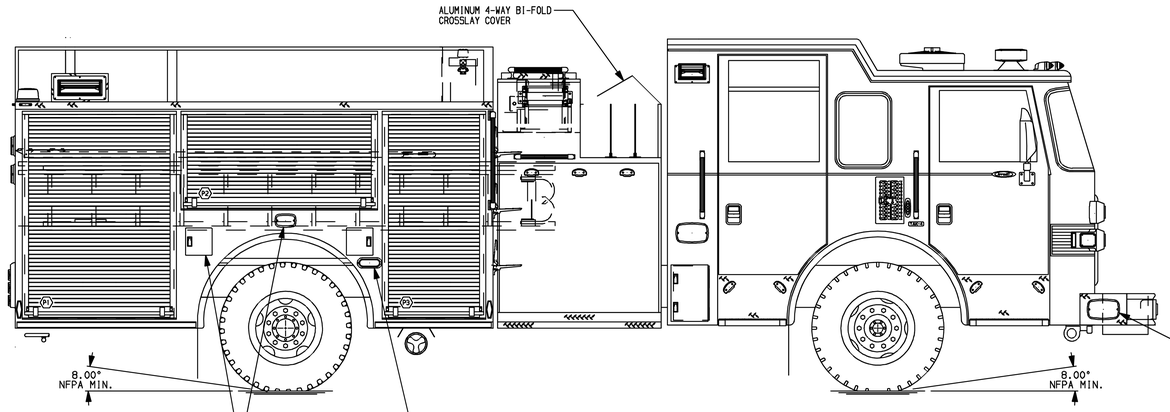

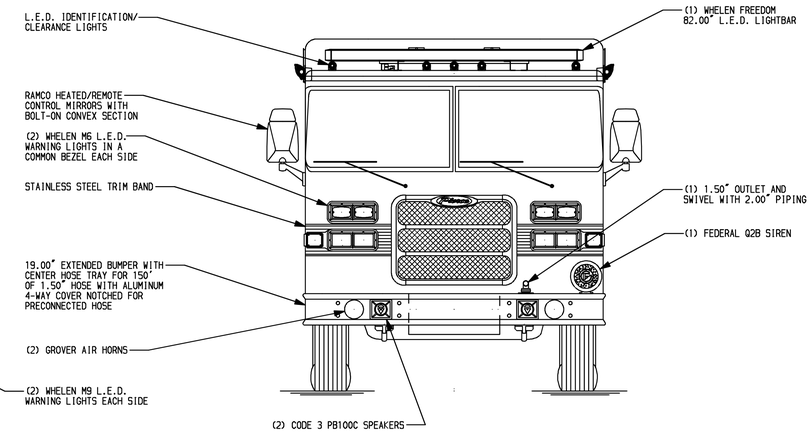

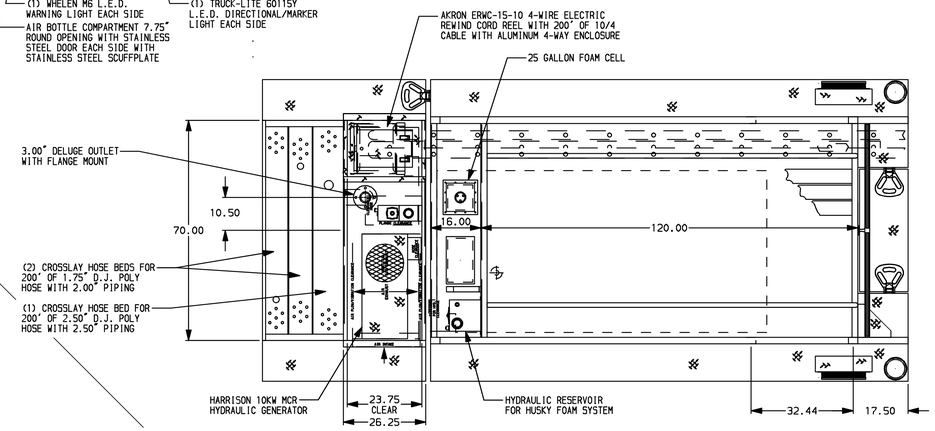

HOSEBED CAPACITIES
1. 500' OF 2.50" HOSE
2. 1000' OF 5.00" HOSE
3. 500' OF 2.50" HOSE

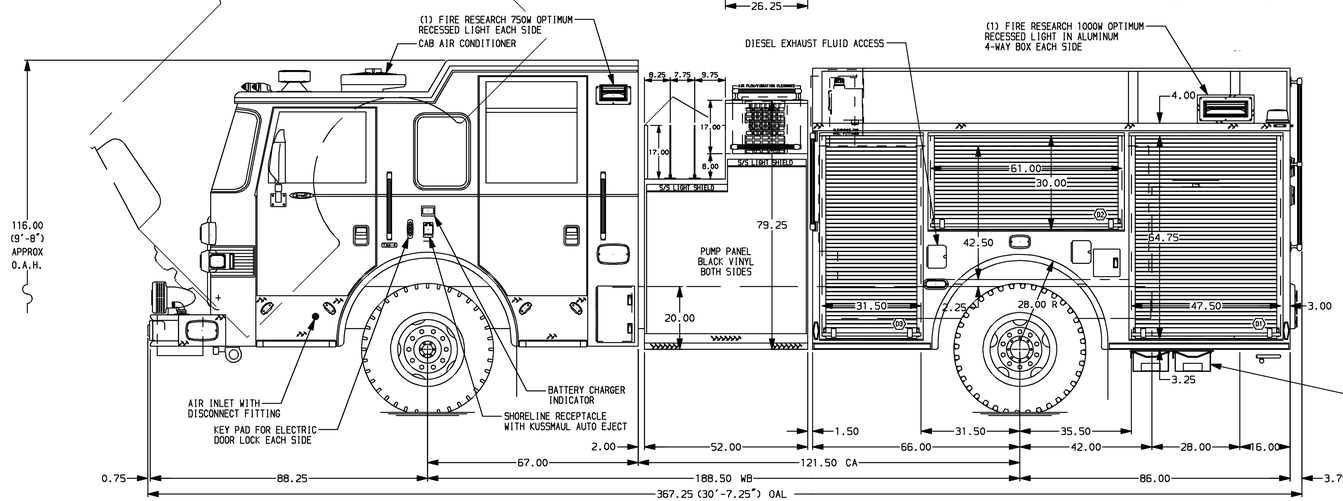

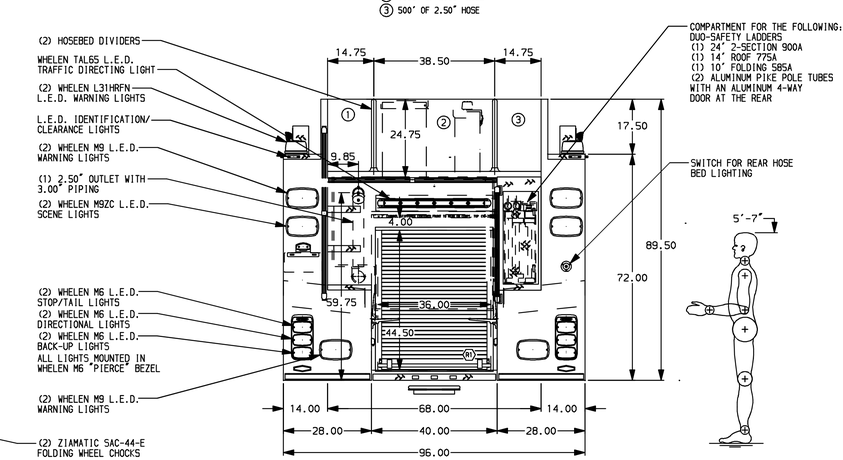

ALUMINUM BODY

SIDE ROLL PROTECTION

NOTE

DIMENSIONS SHOWN ARE APPROXIMATE AND ARE SUBJECT TO MINOR DEVIATIONS AS MAY OCCUR OR BE NECESSARY IN CONSTRUCTION.
MINOR DETAILS NOT SHOWN.

1. STAINLESS STEEL SCUFFPLATE ON EACH CAB DOOR JAMB
2. MOUNTING BASE FOR ANTENNA LOCATED PER SHOP ORDER
3. BATTERY CHARGER LOCATED IN CREW CAB SEAT RISER
4. ON SCENE SOLUTIONS 63.00" L.E.D. NIGHT STIK LIGHT MOUNTED IN HOSE BED
5. STAINLESS STEEL GUARD/DRIP PAN ON COMPARTMENT-D1,D2,D3,P1,P2,P3,R1
6. 500 LB. FLOOR MOUNTED SLIDE-OUT TRAY WITH 2" SIDES IN COMPARTMENT-D1,D3,P1,P3
7. 215 LB. ADJUSTABLE SHELVES IN COMPARTMENT-ONE IN D1,D2,D3,P1,P2,P3; TWO IN R1
8. AMDOR L.E.D. COMPARTMENT LIGHTS IN COMPARTMENT-D1,D2,D3,P1,P2,P3,R1
9. L.E.D. PERIMETER SCENE LIGHTS LOCATED PER SHOP ORDER
10. CIRCUIT BREAKER PANEL IN COMPARTMENT-D3

REV	DATE	BY	CH
B	06APR11	BST	COR
A	09FEB11	BST	COR

CHASSIS DATA
MAKE: PIERCE
MODEL: ARROWXT

Pierce MANUFACTURING INC.

TITLE: 1500-D-775 750 GAL WATER W/25 GAL FOAM, 152" PUMPER FULL HGHT FRNT & REAR, FDLER, COMPTS.(3) CROSSLAYS

FOR: PIERCE FIELD UNIT APPLETON, WI

DWG NO.: 23973AD

JOB NO.	23973
SCALE 1:24	DATE
DRAWN BY BST	14JAN11
CHECKED BY TEO	20JAN11
SHEET SIZE D	SHEET NO. 1 OF 1

View File Created 06-APR-2011 15:58:54