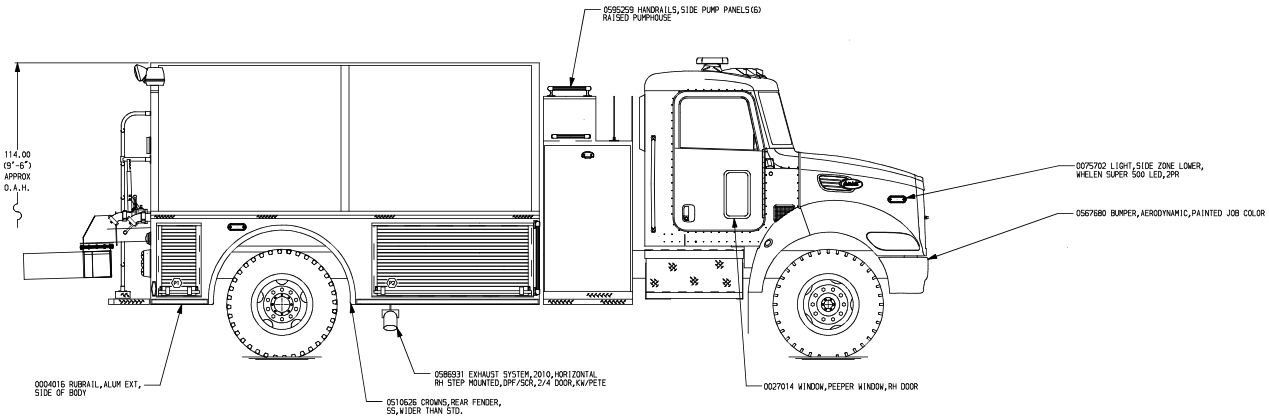

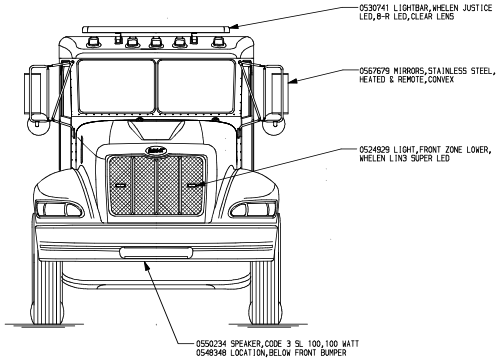

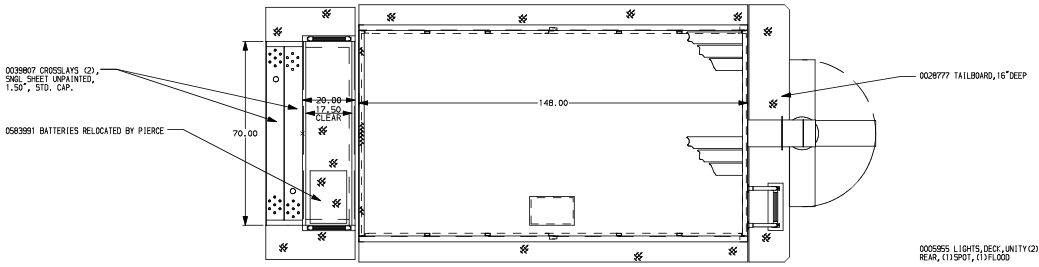

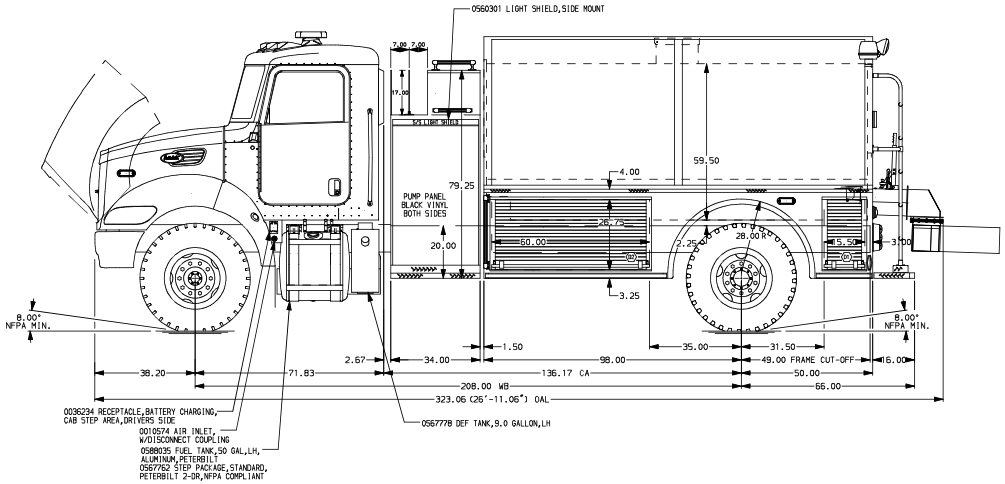

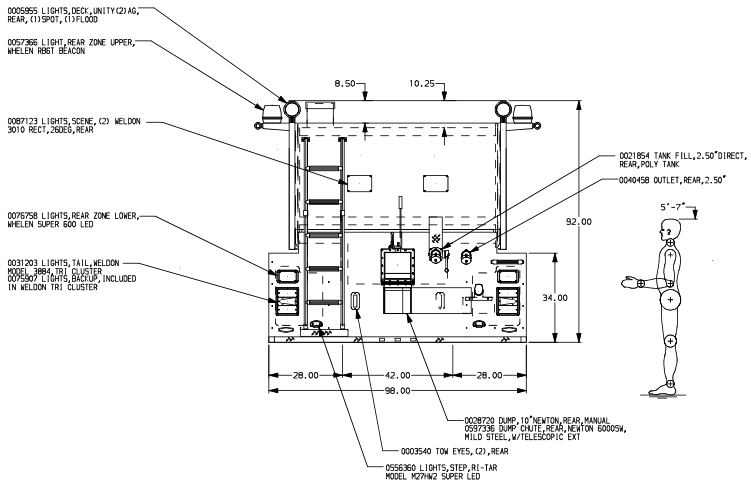

ALUMINUM BODY

NOTE

DIMENSIONS SHOWN ARE APPROXIMATE AND ARE SUBJECT TO MINOR DEVIATIONS AS MAY OCCUR OR BE NECESSARY IN CONSTRUCTION.
MINOR DETAILS NOT SHOWN.

REV	DATE	BY	CH
V	25APR11	AIV	PK2

CHASSIS DATA
MAKE: PETERBILT
MODEL: 348

Pierce MANUFACTURING INC.
BRADENTON, FLORIDA

TITLE: 1000-D-2200 POLY,148"DRYSIDE BODY 34"SIDE CONTROL, (2)CROSSLAYS

FOR: PIERCE STOCK BRADENTON,FLORIDA

DWG NO. 24243AD

JOB NO.	24243
SCALE 1:24	DATE
DRAWN BY AIV	8DEC10
CHECKED BY DTA	08DEC10
SHEET SIZE D	SHEET NO. 1 OF 1