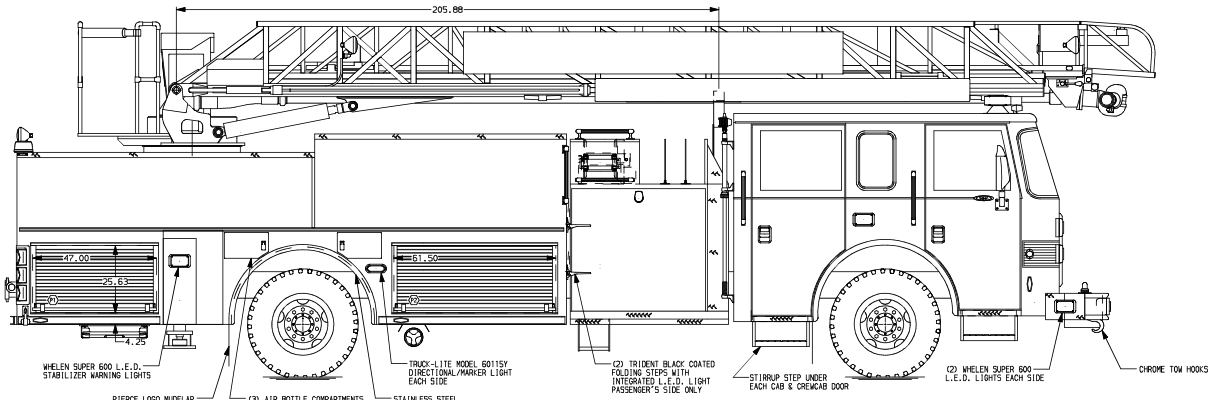

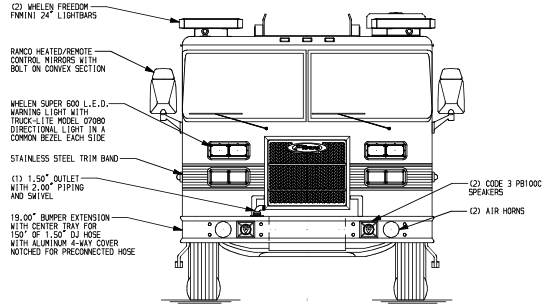

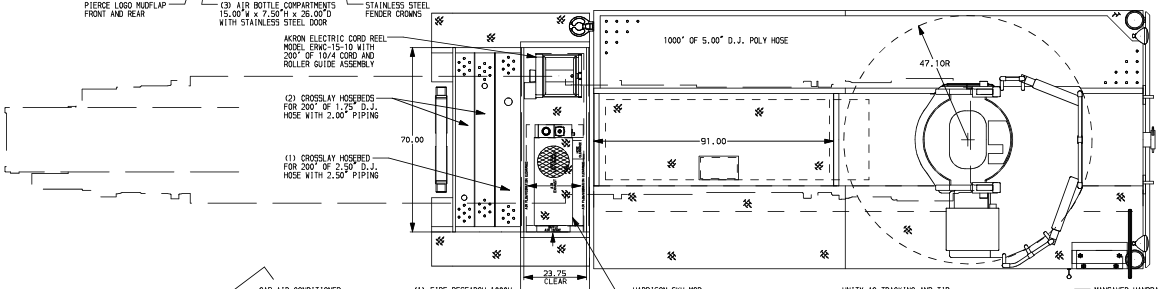

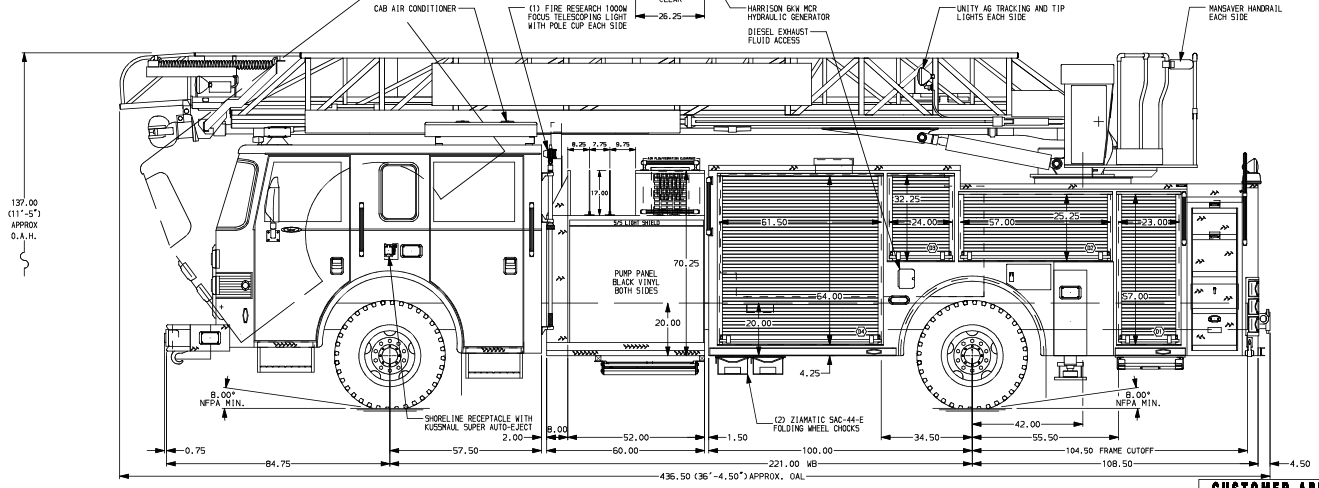

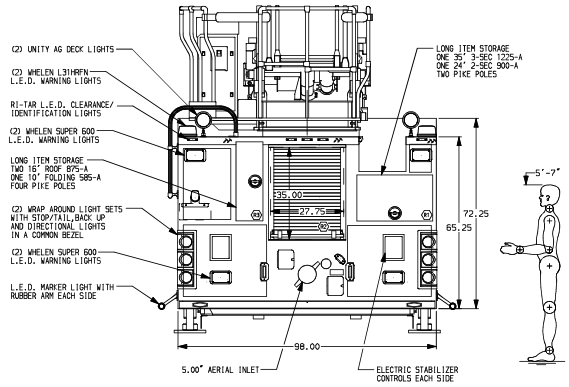

ALUMINUM BODY

NOTE

DIMENSIONS SHOWN ARE APPROXIMATE AND ARE SUBJECT TO MINOR DEVIATIONS AS MAY OCCUR OR BE NECESSARY IN CONSTRUCTION.
MINOR DETAILS NOT SHOWN.

1. AIR INLET LOCATED DRIVER'S SIDE STEP WELL
2. BATTERY CHARGER LOCATED IN COMPARTMENT D4
3. ONE ADJUSTABLE SHELF IN COMPARTMENTS D2 & R2; TWO IN D1 AND D4
4. AMDOR L.E.D. LIGHTS IN ALL BODY COMPARTMENTS
5. PERIMETER SCENE LIGHTS LOCATED PER SHOP ORDER
6. CIRCUIT BREAKER PANEL IN COMPARTMENT D4
7. 120V POWER TO AERIAL TIP
8. 1500 GPM HIGH FLOW WATERWAY
9. AERIAL DEVICE STEPS TO BE TRIDENT BLACK COATED
10. 2-WAY INTERCOM SYSTEM BETWEEN AERIAL TIP AND TURNTABLE
11. L.E.D. ROPE LIGHTING ON AERIAL DEVICE

CUSTOMER APPROVAL

APPROVED BY: _____

DATE: _____

REV	DATE	BY	CH
1	22FEB11	TKA	COR

CHASSIS DATA
MAKE: PIERCE
MODEL: SABER

Pierce MANUFACTURING INC.

TITLE: 75 AERIAL LADDER & BODY ASSEMBLY
500 GALLON WATER TANK

FOR: PIERCE STOCK
APPLETON, WI

DWG NO. 24261AD

JOB NO.	24261
SCALE	1:24
DATE	
DRAWN BY	TKA 29NOV10
CHECKED BY	GRM 30NOV10
SHEET SIZE	D
SHEET NO.	1 OF 1