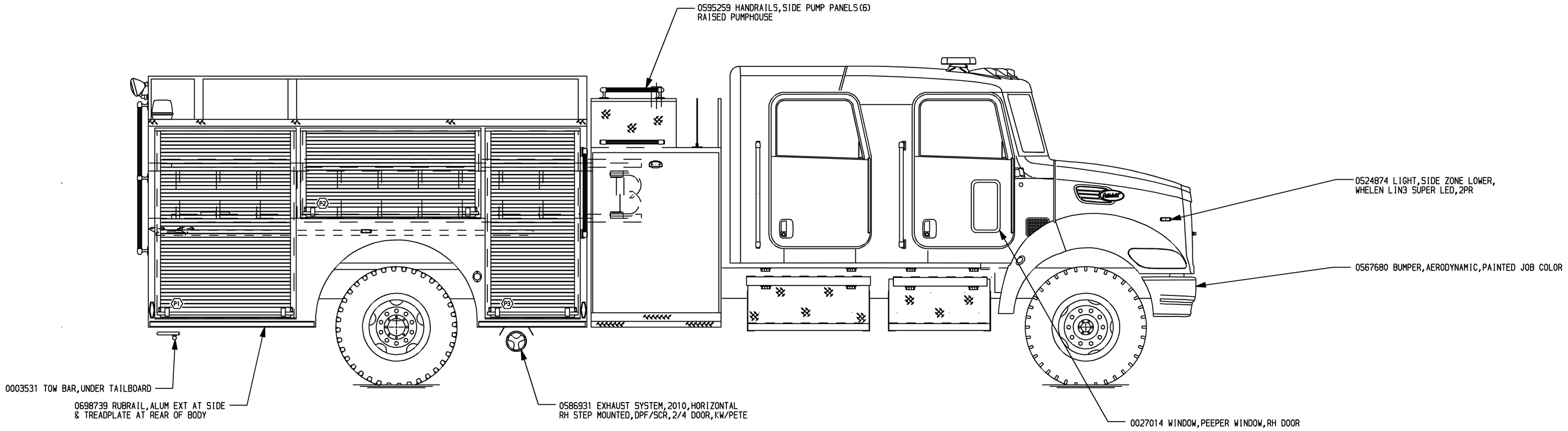

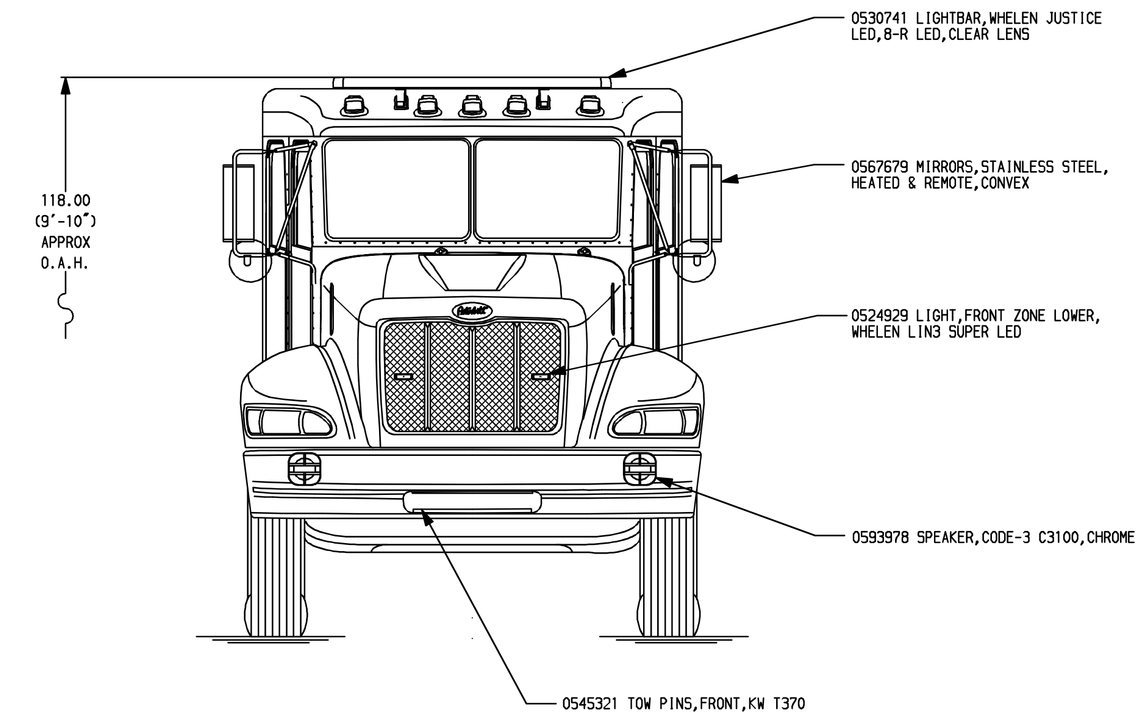

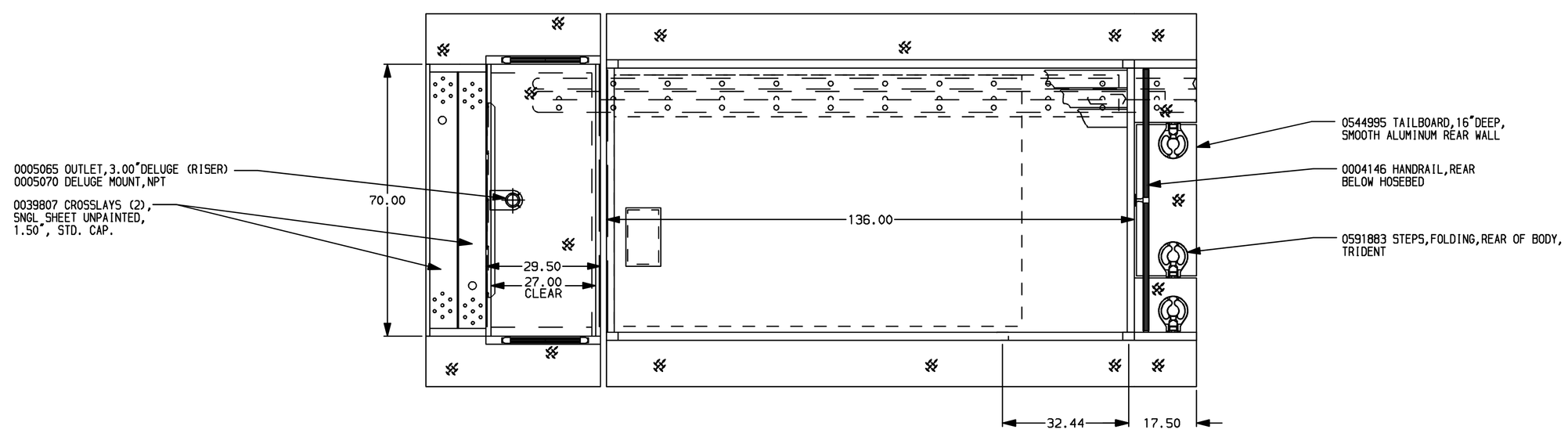

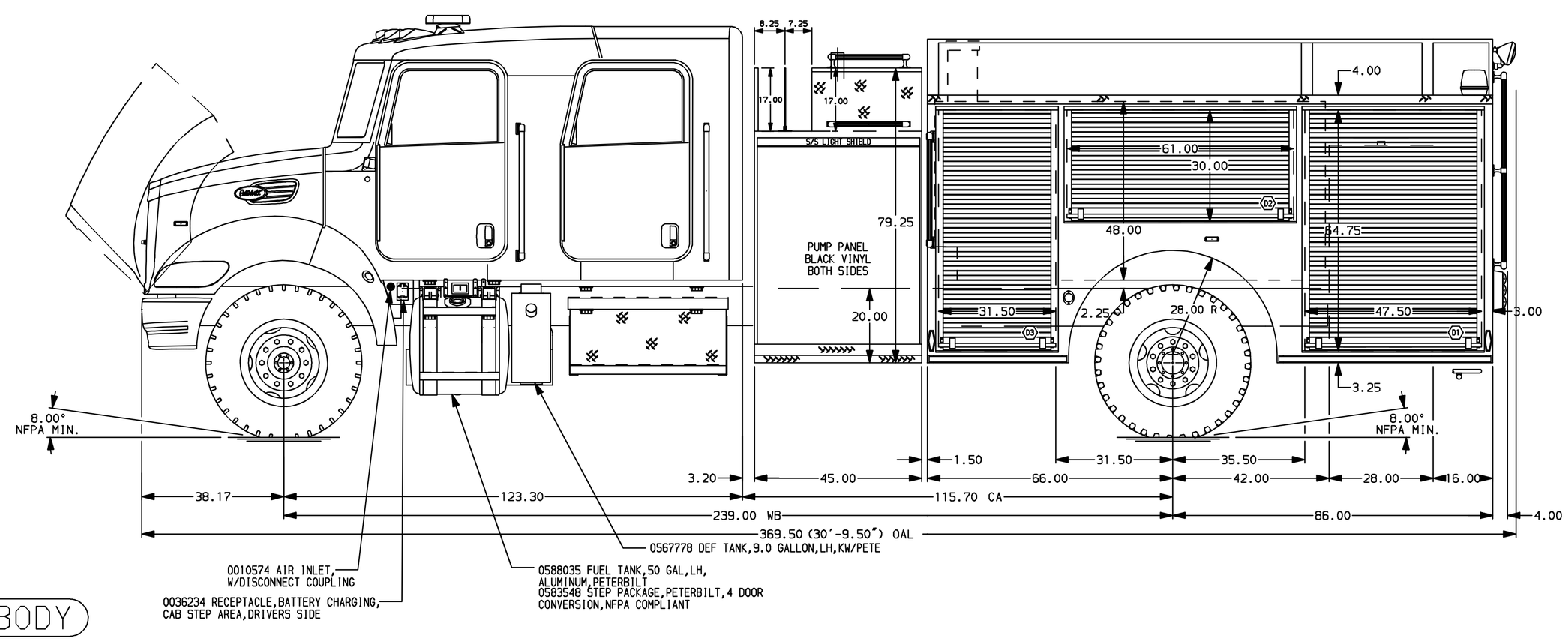

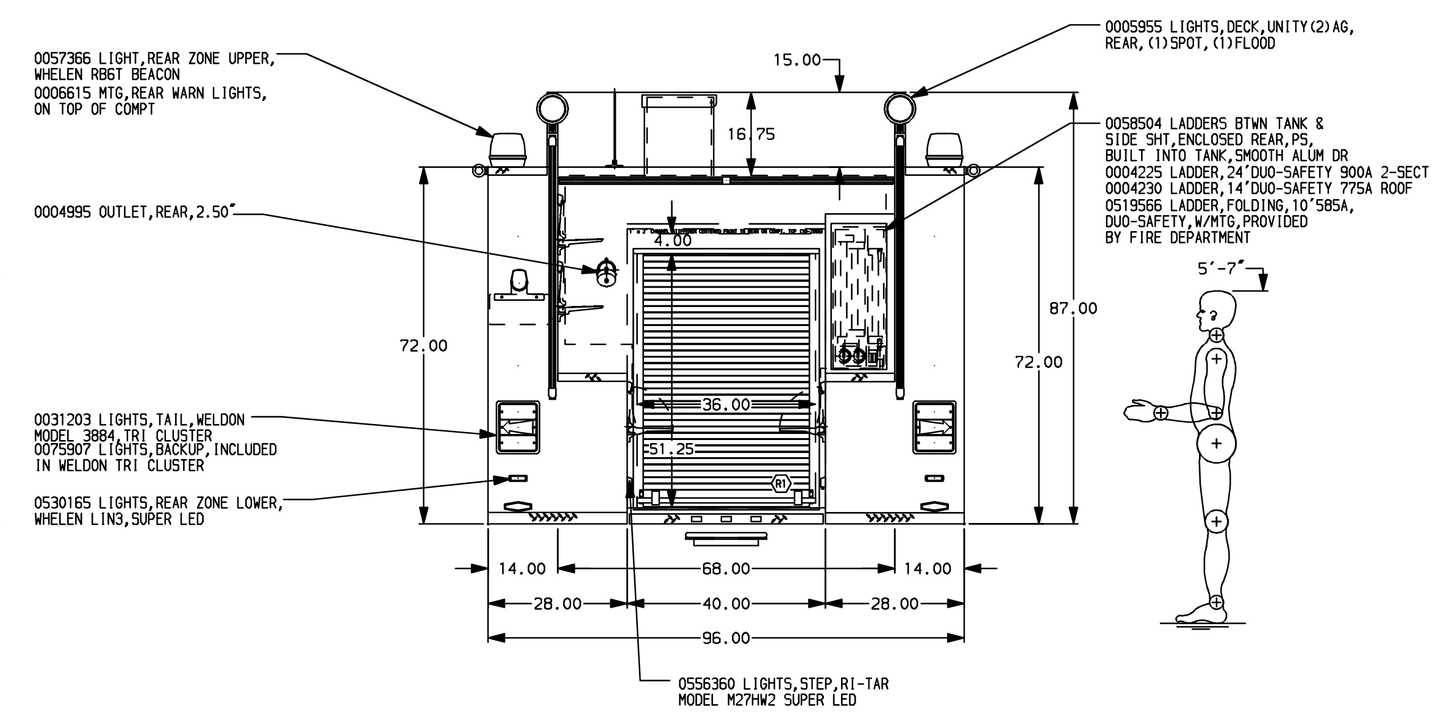

ALUMINUM BODY

NOTE

DIMENSIONS SHOWN ARE APPROXIMATE AND ARE SUBJECT TO MINOR DEVIATIONS AS MAY OCCUR OR BE NECESSARY IN CONSTRUCTION.
MINOR DETAILS NOT SHOWN.

REV	DATE	BY	CH
B	9MAY12	JAF	DTA
V	18AUG11	AIV	BZI

CHASSIS DATA	TITLE	1250-D-1000 POLY,152"BODY,DS&PS FULL HEIGHT 45"SIDE CONTROL,(2)CROSSLAYS	
MAKE PETERBILT	FOR	PIERCE STOCK BRADENTON,FLORIDA	
MODEL 337	DWG NO.	24998AD	

Pierce MANUFACTURING INC.

JOB NO.	24998
SCALE 1:24	DATE
DRAWN BY AIV	01AUG11
CHECKED BY DTA	01AUG11
SHEET SIZE D	SHEET NO. 1 OF 1