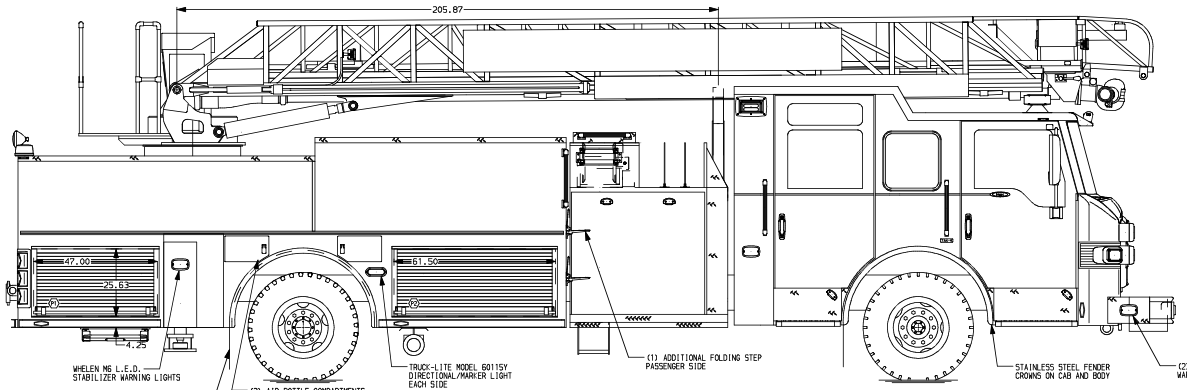

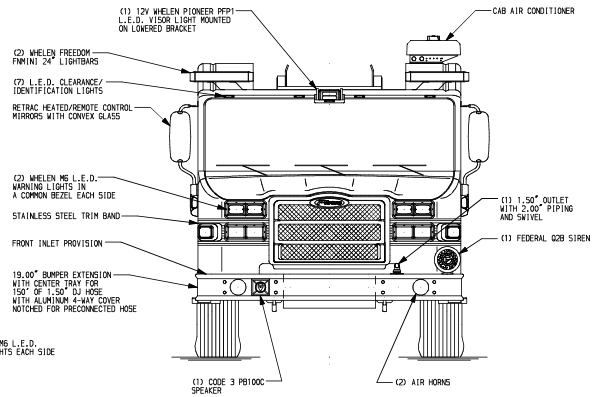

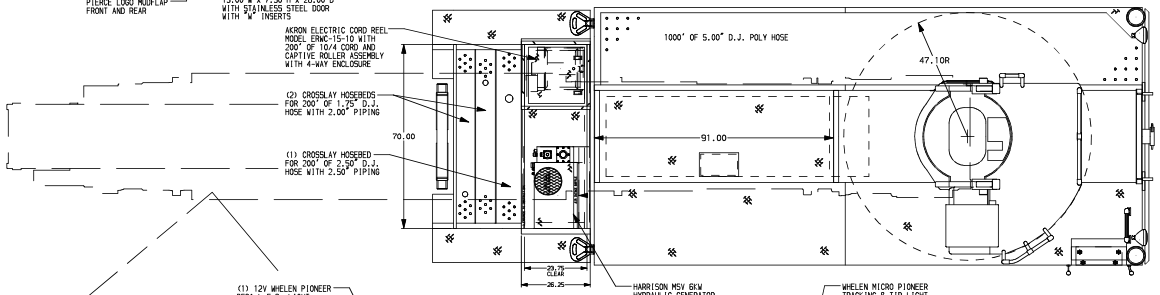

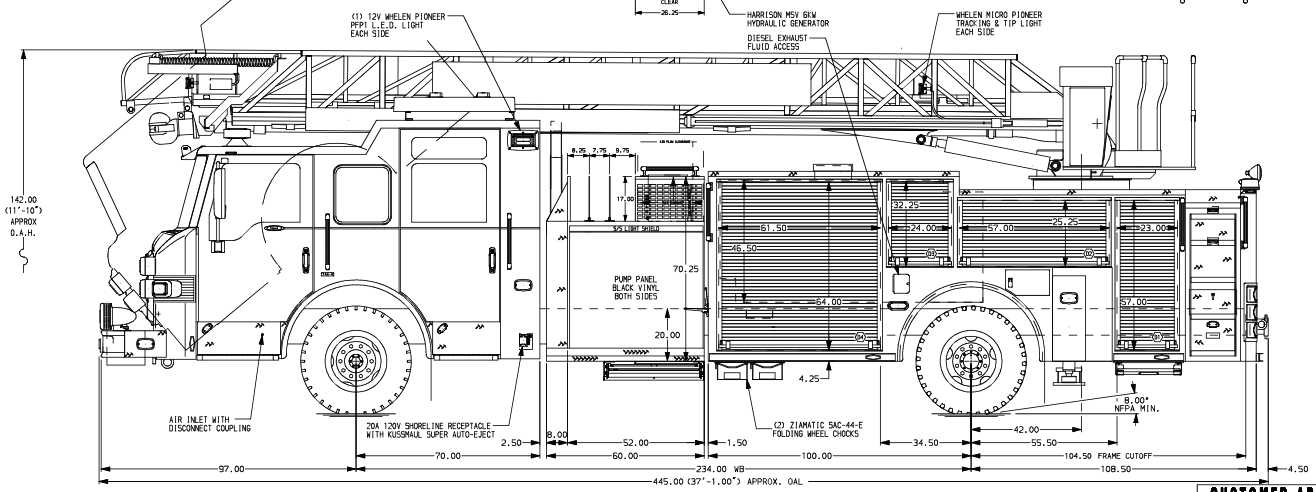

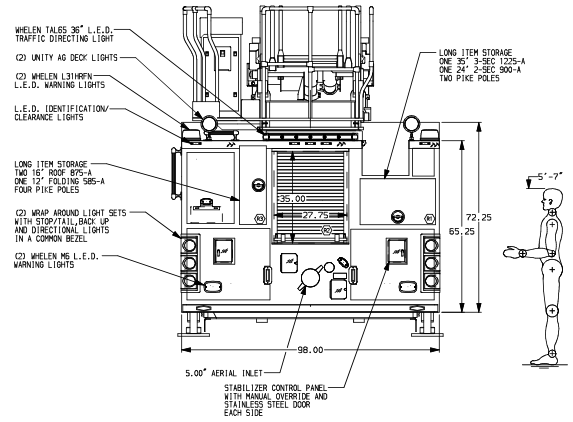

ALUMINUM BODY

FRONTAL IMPACT AND SIDE ROLL PROTECTION

NOTE

DIMENSIONS SHOWN ARE APPROXIMATE AND ARE SUBJECT TO MINOR DEVIATIONS AS MAY OCCUR OR BE NECESSARY IN CONSTRUCTION.
MINOR DETAILS NOT SHOWN.

1. MOUNTING BASE FOR ANTENNA LOCATED PER SHOP ORDER
2. BATTERY CHARGER LOCATED BEHIND THE DRIVERS SEAT
3. ONE ADJUSTABLE FULL WIDTH/FULL DEPTH SHELF IN COMPARTMENT D1,D2,D4
4. PIERCE L.E.D. COMPARTMENT LIGHT STRIPS IN COMPARTMENT D1,D2,D3,D4,P1,P2,R2
5. PERIMETER SCENE LIGHTS LOCATED PER SHOP ORDER
6. CIRCUIT BREAKER PANEL IN COMPARTMENT D4
7. ONE FLOOR MOUNTED SLIDE-OUT TRAY IN COMPARTMENT D4
8. 1500 GPM HIGH FLOW WATERWAY
9. EBERHARD FOLDING STEPS MOUNTED ON THE AERIAL DEVICE PER SHOP ORDER
10. 2-WAY INTERCOM SYSTEM BETWEEN AERIAL TIP AND TURNTABLE
11. L.E.D. ROPE LIGHTING ON AERIAL DEVICE
12. LIFTING EYE RESCUE ATTACHMENT AT AERIAL TIP
13. ALUMINUM TREADPLATE EXTERIOR REAR WALL OF CAB
14. 120V POWER TO AERIAL TIP
15. AERIAL PEDESTAL RAISED 1.50"

CUSTOMER APPROVAL

APPROVED BY:

DATE:

REV	DATE	BY	CH
V	06SEP12	SHU	SHE

CHASSIS DATA
MAKE: PIERCE
MODEL: IMP7010

Pierce MANUFACTURING INC.

TITLE: 75' HAL TCO AERIAL LADDER & BODY ASSEMBLY
500 GALLON WATER TANK

FOR: PIERCE STOCK
APPLETON, WI

DWG NO. 26043AD

JOB NO.	26043
SCALE 1:24	DATE
DRAWN BY TKA	12JUL12
CHECKED BY JBL	20JUL12
SHEET SIZE D	SHEET NO. 1 OF 1