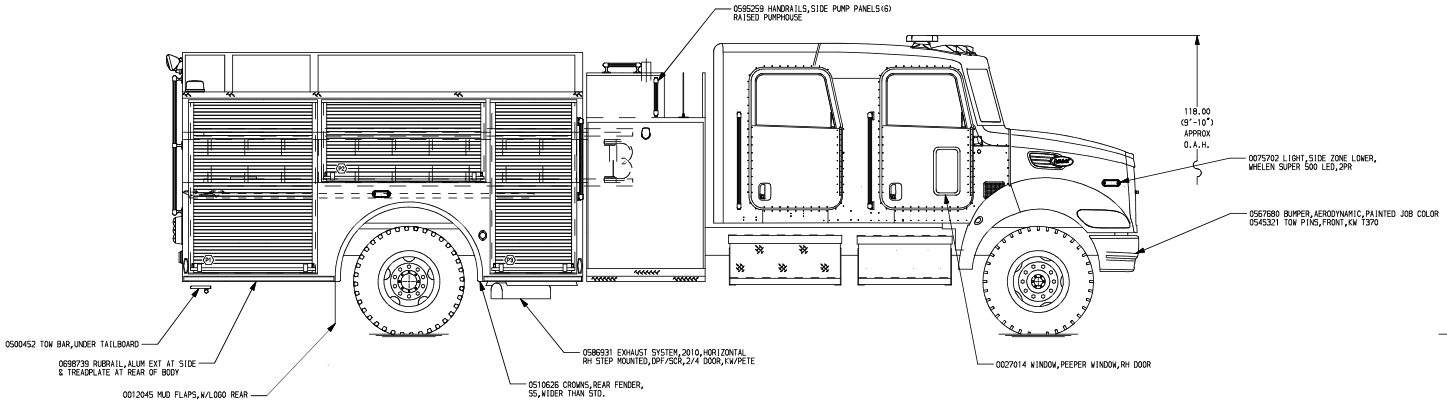

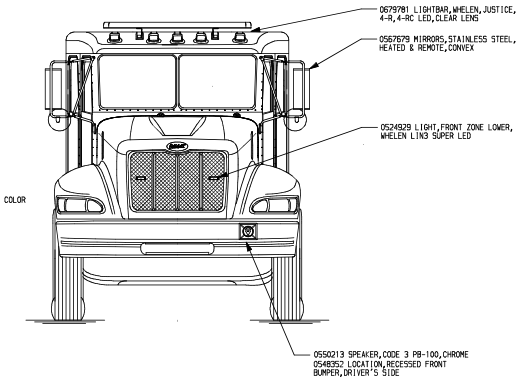

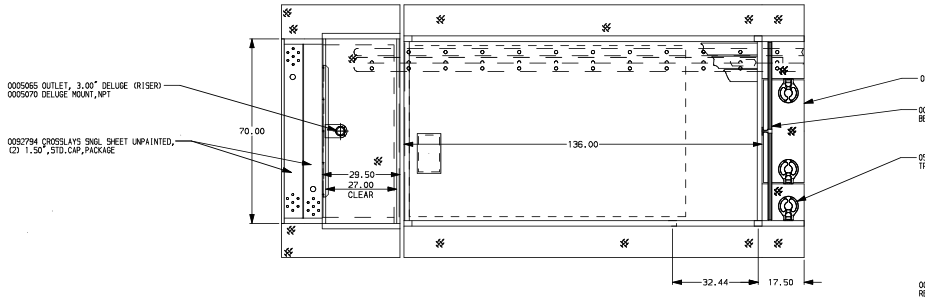

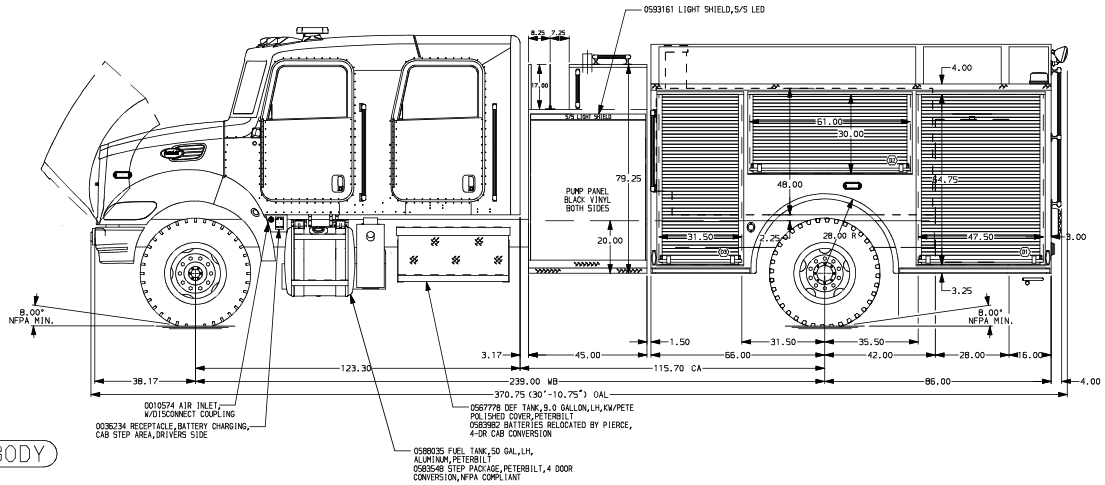

HOSEBED CAPACITIES
1. 1500" OF 2.50" D.J. POLYESTER HOSE
2. 400" OF 1.50" D.J. POLYESTER HOSE

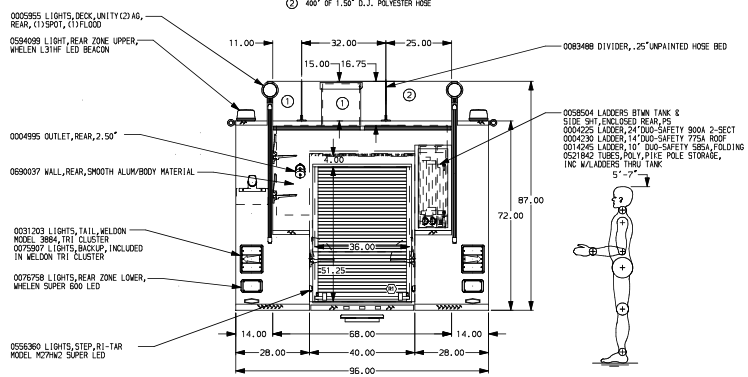

ALUMINUM BODY

NOTE
DIMENSIONS SHOWN ARE APPROXIMATE AND ARE SUBJECT TO MINOR DEVIATIONS AS MAY OCCUR OR BE NECESSARY IN CONSTRUCTION.
MINOR DETAILS NOT SHOWN.

REV	DATE	BY	CH
V	3MAY12	AIV	JCH

CHASSIS DATA
MAKE: PETERBILT
MODEL: 348

Pierce MANUFACTURING INC.
BRADENTON, FLORIDA

TITLE: 1250-D-1000 POLY 152"BODY DS & PS FULL HGT 45"SIDE CONTROL (2)CROSSLAYS
FOR: PIERCE STOCK BRADENTON,FLORIDA
DWG NO. 25553AD

JOB NO.	25553
SCALE	1:24
DATE	
DRAWN BY	AIV 17JAN12
CHECKED BY	DTA 17JAN12
SHEET SIZE	D
SHEET NO.	1 OF 1