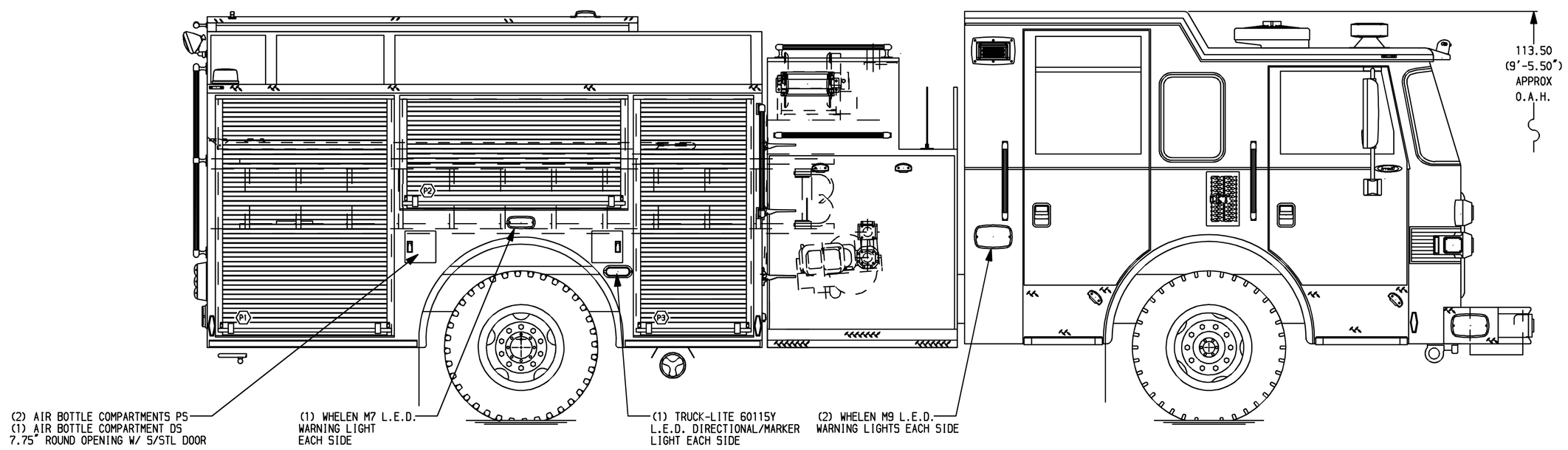

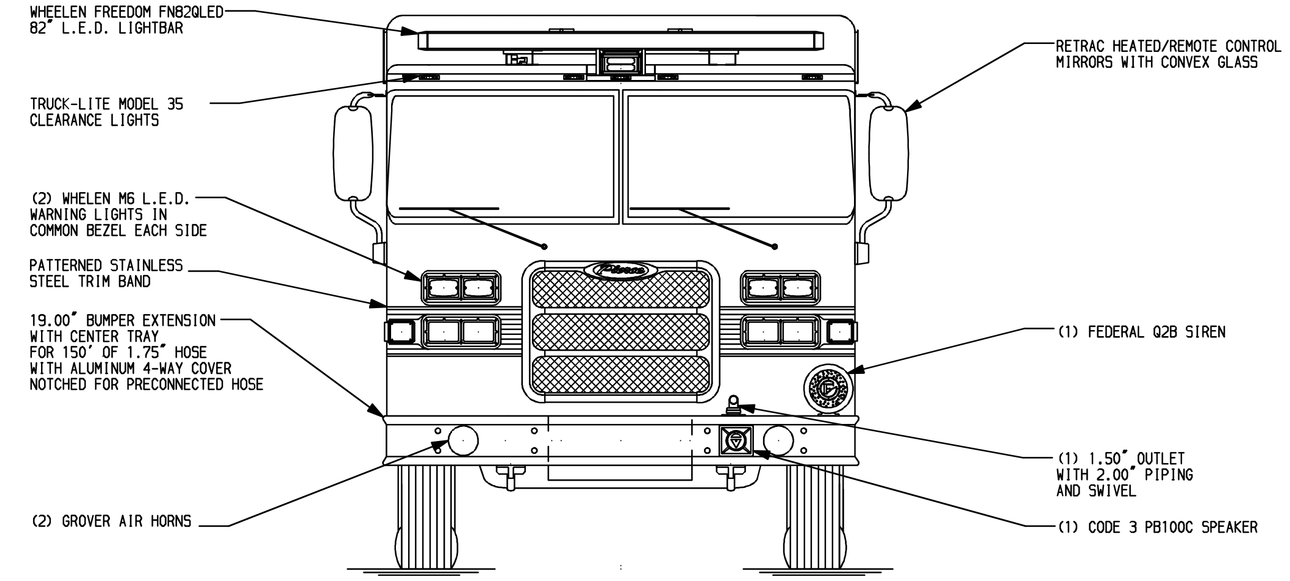

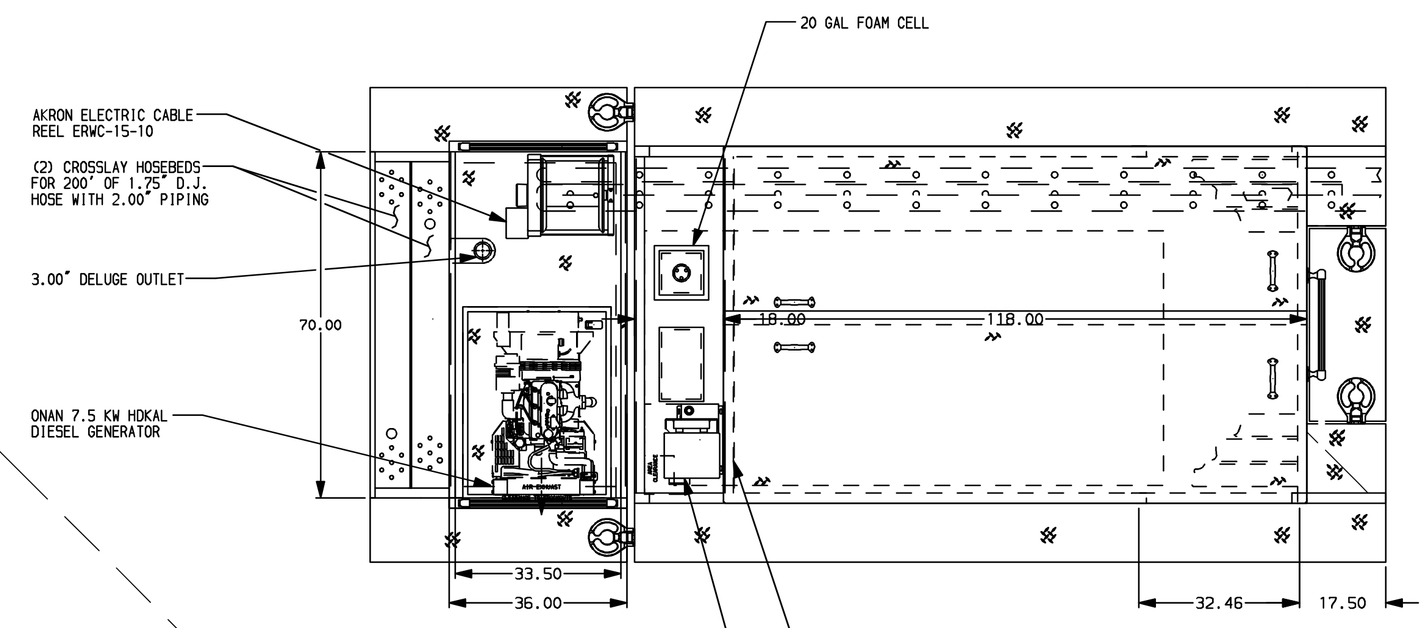

HOSEBED CAPACITIES
1. 500' OF 2.50" D.J. HOSE
2. 1000' OF 5.00" D.J. HOSE
3. 500' OF 2.50" D.J. HOSE

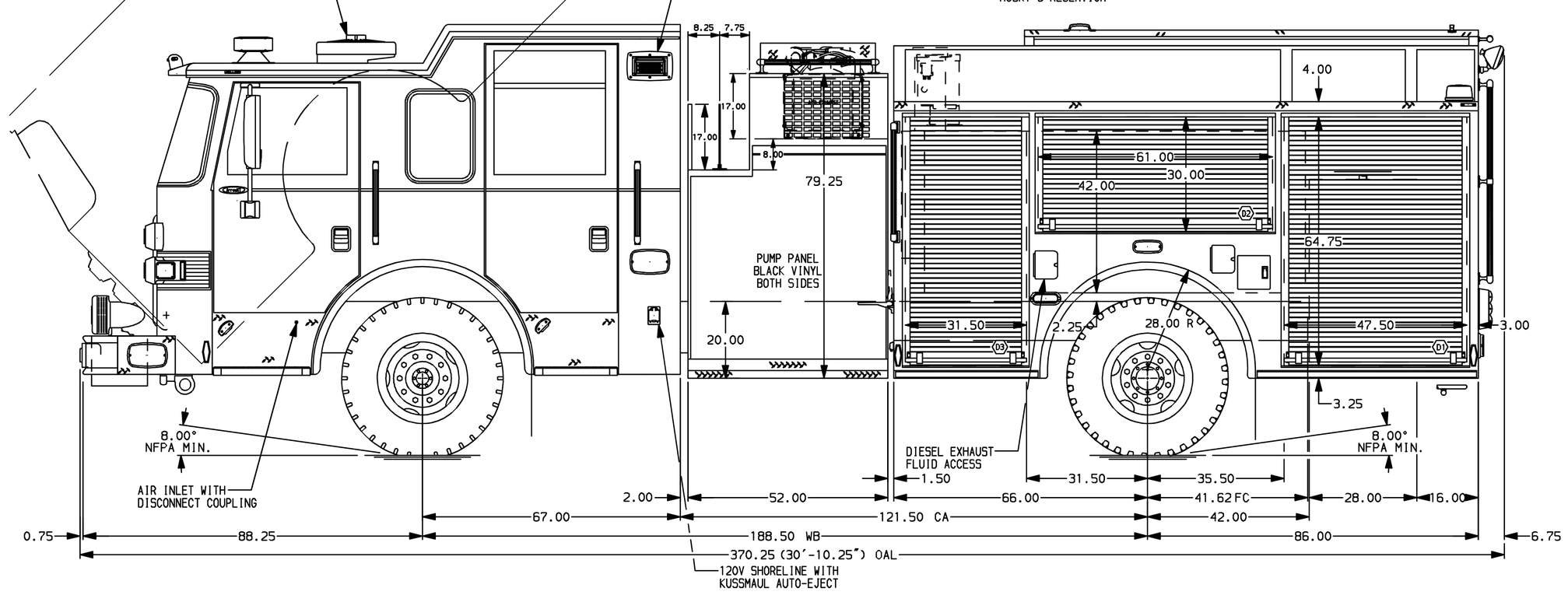

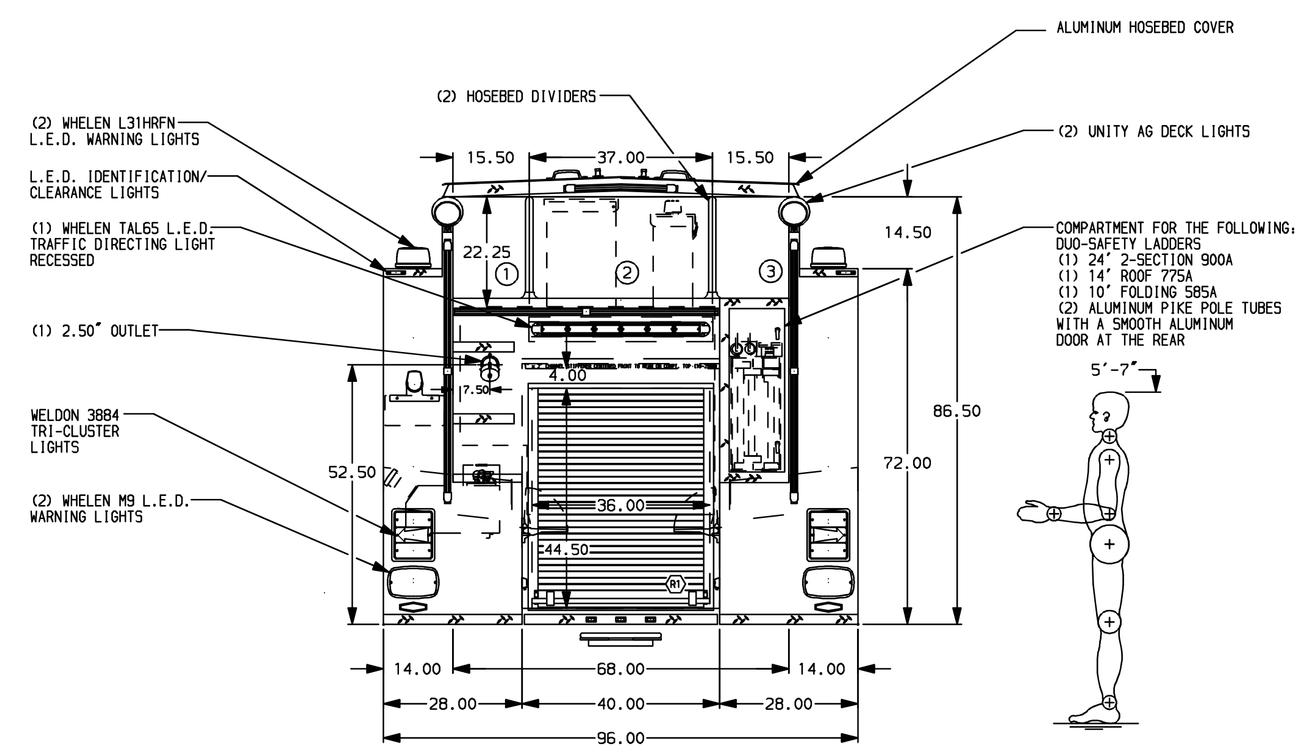

ALUMINUM BODY

FRONTAL IMPACT PROTECTION

SIDE ROLL PROTECTION

NOTE

DIMENSIONS SHOWN ARE APPROXIMATE AND ARE SUBJECT TO MINOR DEVIATIONS AS MAY OCCUR OR BE NECESSARY IN CONSTRUCTION.
MINOR DETAILS NOT SHOWN.

1. PIERCE LOGO MUDFLAPS FRONT AND REAR
2. MOUNTING BASE FOR ANTENNA LOCATED PER SHOP ORDER
3. ALL FOLDING STEPS TO BE TRIDENT WITH INTEGRATED L.E.D. LIGHT UNLESS SPECIFIED
4. AMDOR LUMABAR PERIMETER SCENE LIGHTS LOCATED PER SHOP ORDER
5. S/STL FENDER CROWNS FRONT AND REAR
6. CIRCUIT BREAKER PANEL IN COMPARTMENT D3
7. S/STL PROTECTIVE GUARD FOR ALL ROLL-UP DOORS
8. TRUCK-LITE COMPARTMENT LIGHTS LOCATED PER SHOP ORDER
9. ONE FULL WIDTH/DEPTH PAINTED ADJUSTABLE SHELF IN COMPARTMENTS D1, D3, P1, P3 & R1
10. ONE FLOOR MOUNTED SLIDE-OUT TRAYS IN COMPARTMENTS D1, D3, & P1
11. EQUIPMENT MOUNTING TRACKS LOCATED IN COMPARTMENTS D2 & P2
12. PAINTED SHELF TRACKS LOCATED IN ALL COMPARTMENTS

CUSTOMER APPROVAL

APPROVED BY: _____

DATE: _____

REV	DATE	BY	CH
B	17APR12	SHA	SHE
A	16MAR12	COL	SHE

CHASSIS DATA — MAKE: PIERCE — MODEL: AXT6710

Pierce MANUFACTURING INC.

TITLE: 1500-D 750 GAL POLY W/ 20 GAL FOAM CELL, 152 FDLER (2) XLAYS, GENERATOR, DELUGE, CABLE REEL

FOR: PIERCE STOCK UNIT APPLETON, WI

DWG NO.: 25554AD

JOB NO.	25554
SCALE	1:24
DATE	
DRAWN BY	COL 24JAN12
CHECKED BY	CSH 31JAN12
SHEET SIZE	D
SHEET NO.	1 OF 1