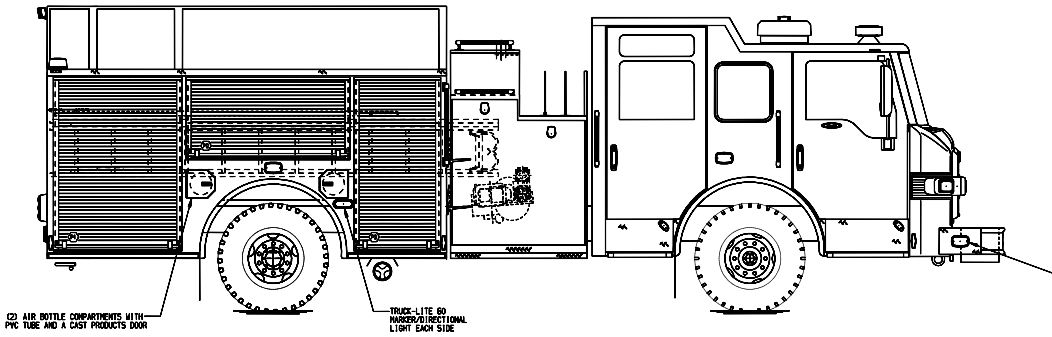

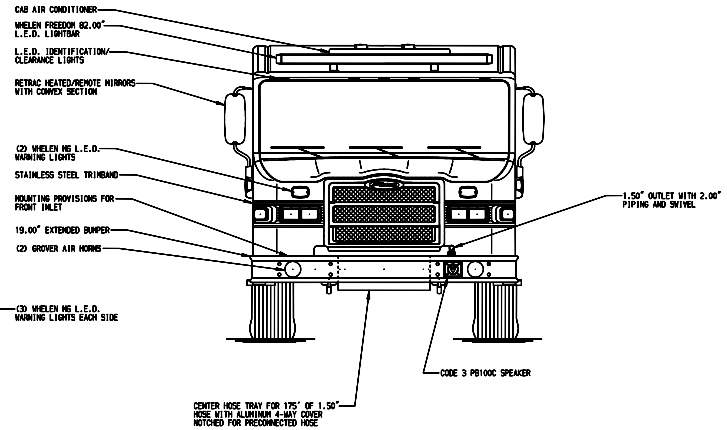

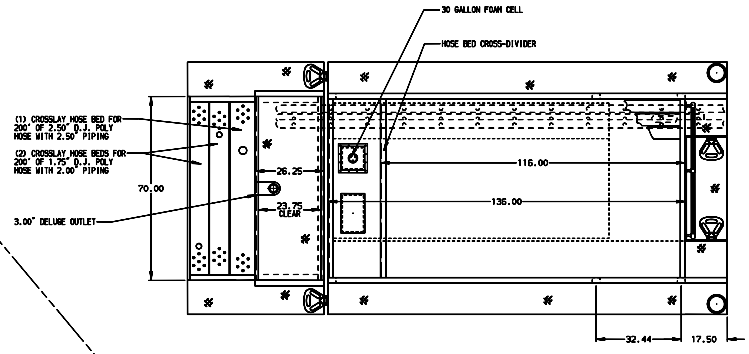

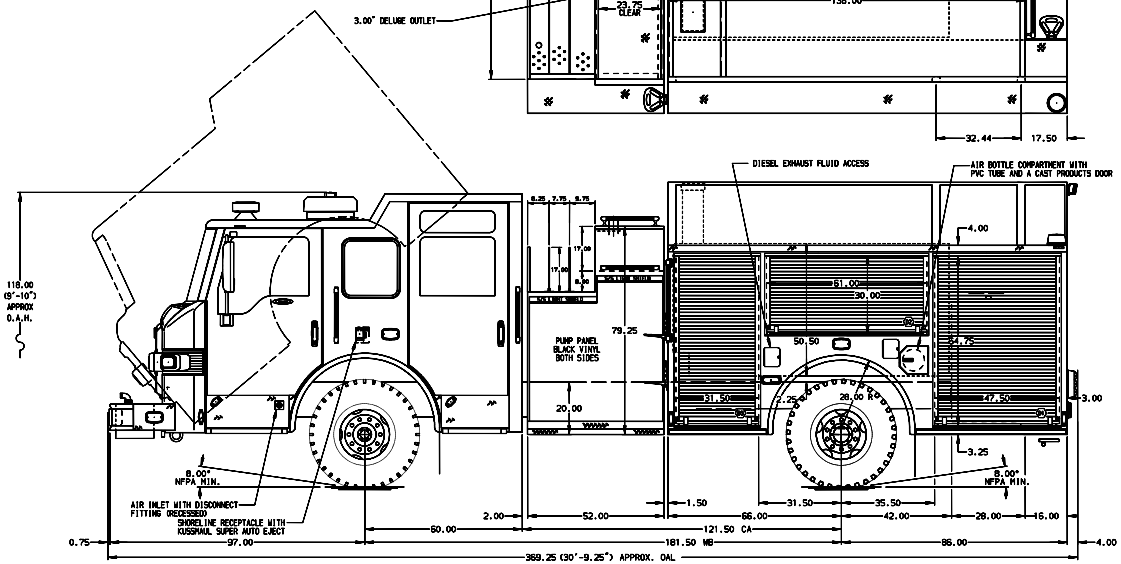

HOSEBED CAPACITIES
1 - 500' OF 2.50" D.J. POLY HOSE
2 - 1000' OF 5.00" D.J. POLY HOSE
3 - 500' OF 2.50" D.J. POLY HOSE

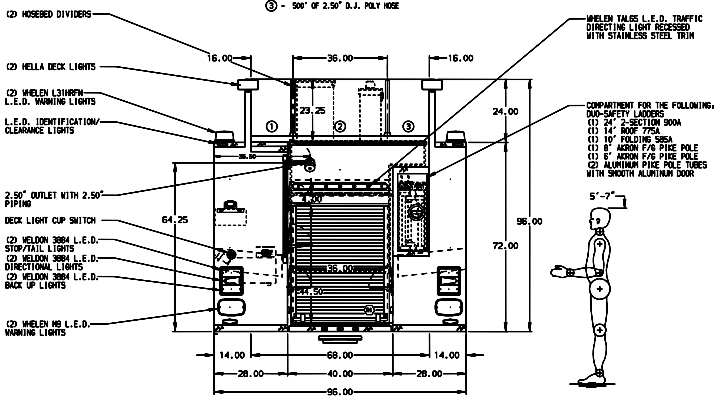

ALUMINUM BODY

NOTE

DIMENSIONS SHOWN ARE APPROXIMATE AND ARE SUBJECT TO MINOR DEVIATIONS AS MAY OCCUR OR BE NECESSARY IN CONSTRUCTION.
MINOR DETAILS NOT SHOWN.

1. MOUNTING BASE FOR ANTENNA LOCATED PER SHOP ORDER
2. BATTERY CHARGER LOCATED BEHIND DRIVER'S SEAT
3. PERIMETER SCENE LIGHTS LOCATED PER SHOP ORDER
4. STAINLESS STEEL GUARD/DRIP PAN ON COMPARTMENT-D1,D2,D3,P1,P2,P3,R1
5. PIERCE L.E.D. COMPARTMENT LIGHT STRIPS LOCATED PER SHOP ORDER
6. PAINTED SHELF TRACKS IN COMPARTMENT-D1,D3,P1,P3,R1
7. 500 LB. FULL WIDTH/DEPTH ADJUSTABLE PAINTED SHELVES IN COMPARTMENT-D1,D3,P1,P3,R1
8. 500 LB. FLOOR MOUNTED SLIDE-OUT TRAYS WITH 2" SIDES IN COMPARTMENT-D1,D3,P1
9. HORIZONTAL EQUIPMENT MOUNTING TRACKS IN COMPARTMENT-D2,P2
10. MOUNTING PROVISIONS FOR A WILL-BURT NIGHT SCAN LIGHT TOWER ON CREW CAB ROOF

REV	DATE	BY	CH
1	15JAN13	SMA	COR
2	05DEC12	SBU	COR
3	15NOV12	SBU	TEO

CUSTOMER APPROVAL
APPROVED BY: _____
DATE: _____

CHASSIS DATA
NAME: PIERCE
MODEL: VXL6010

PIERCE MANUFACTURING INC.

TITLE: 1500-D-780 750 WTR W/30 FOAM,152" BDY FL HGHT & DPTH PS FL HGHT FRNT & REAR,FDLER,LDDRS BTWN TNK & SDSHT

FOR: PIERCE FIELD UNIT
APPLETON, WI

DWG NO. 26471AD

JOB NO.	26471
SCALE 1:24	DATE
DRAWN BY SBU	02NOV12
CHECKED BY TEO	05NOV12
SHEET SIZE D	SHEET NO. 1 OF 1