PASSENGER'S SIDE COMPARTMENTS CONTAIN THE FOLLOWING:

COMPARTMENT P1 CONTAINS:

COMPARTMENT P2 CONTAINS:

COMPARTMENT P3 CONTAINS:

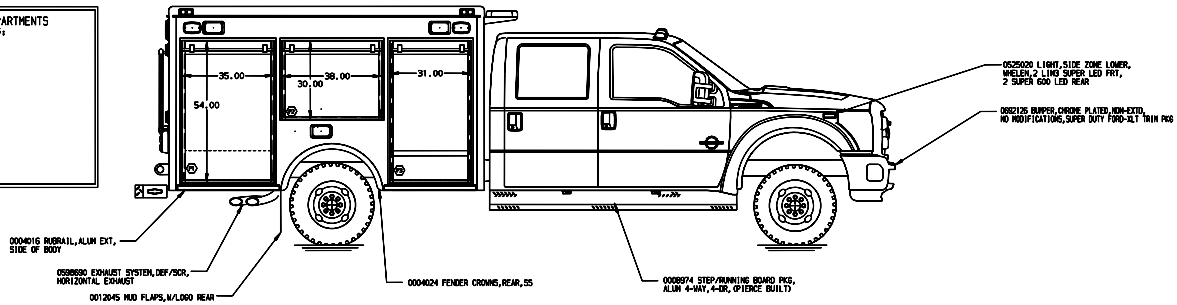

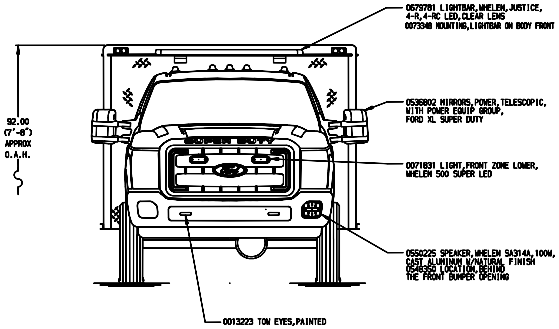

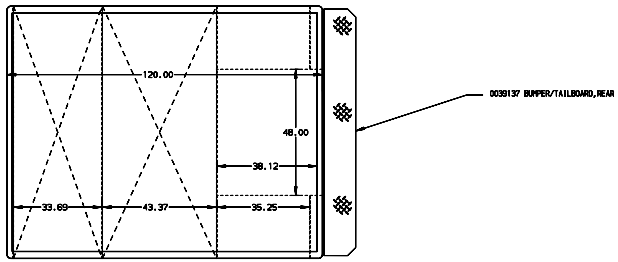

REAR COMPARTMENT R1 CONTAINS THE FOLLOWING:

COMPARTMENT R1 CONTAINS:

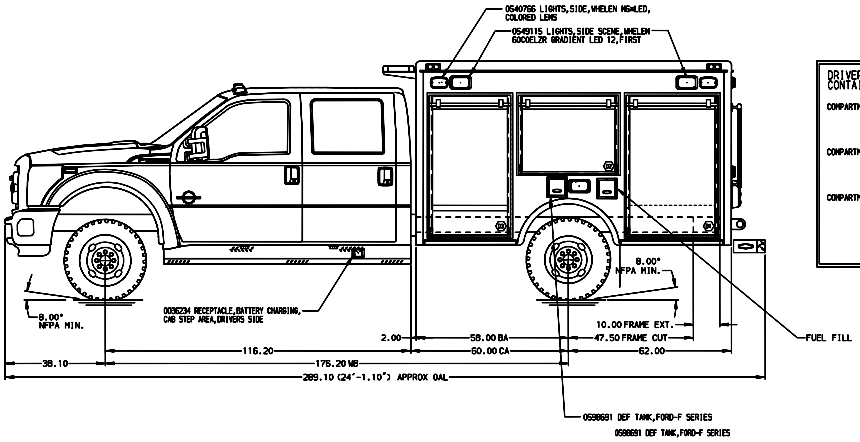

DRIVER'S SIDE COMPARTMENTS CONTAIN THE FOLLOWING:

COMPARTMENT D1 CONTAINS:

COMPARTMENT D2 CONTAINS:

COMPARTMENT D3 CONTAINS:

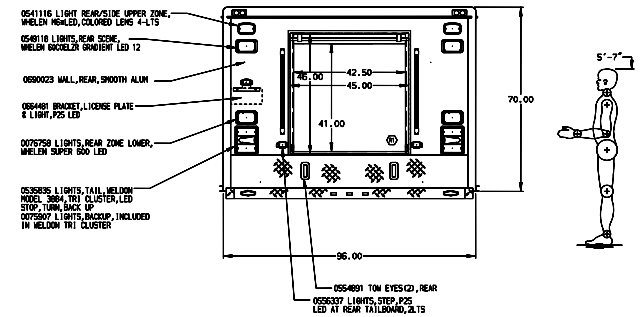

ALUMINUM BODY

NOTE

DIMENSIONS SHOWN ARE APPROXIMATE AND ARE SUBJECT TO MINOR DEVIATIONS AS MAY OCCUR OR BE NECESSARY IN CONSTRUCTION.
MINOR DETAILS NOT SHOWN.

REV.	DATE	BY	CHK'D	
				CHASSIS DATA
				CHASSIS FORD
	19FEB13	AIV	CAG	MODEL F550 4X4

Pierce MANUFACTURING INC.
BRADENTON, FLORIDA

TITLE	10 FT CONTENDER RESCUE NON-WALKIN	JOB NO.	26224
		DATE	SCALE 1:24
FOR	PIERCE MANUFACTURING BRADENTON,FLORIDA	21SEP12	DRAWN BY AIV
		21SEP12	CHK'D BY DTA
DRWG. NO.	26224AD	SHEET NO. 1 OF 1	SHEET SIZE D