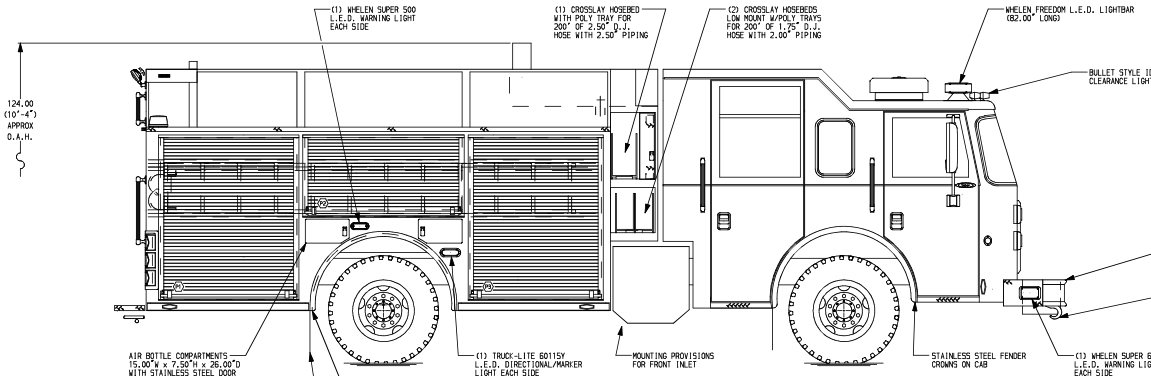

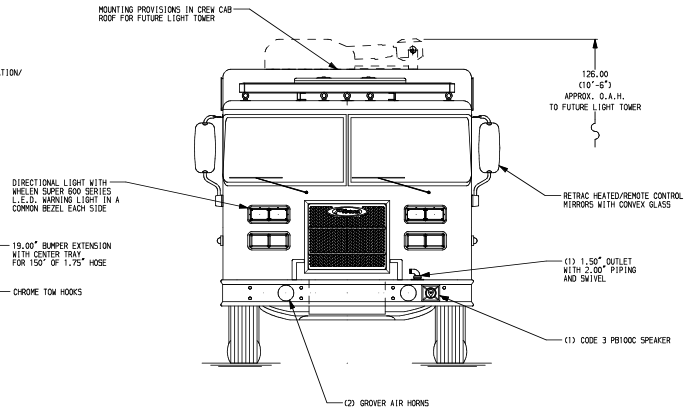

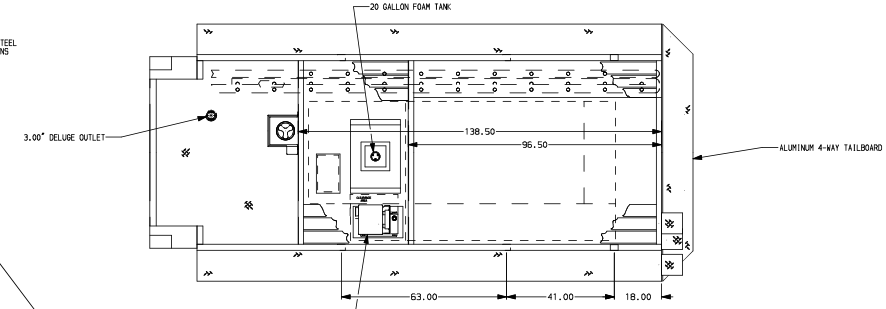

HOSEBED CAPACITIES

1. 1000' OF 5.00" D.J.POLY HOSE
2. 500' OF 3.00" D.J.POLY HOSE
3. 500' OF 3.00" D.J.POLY HOSE

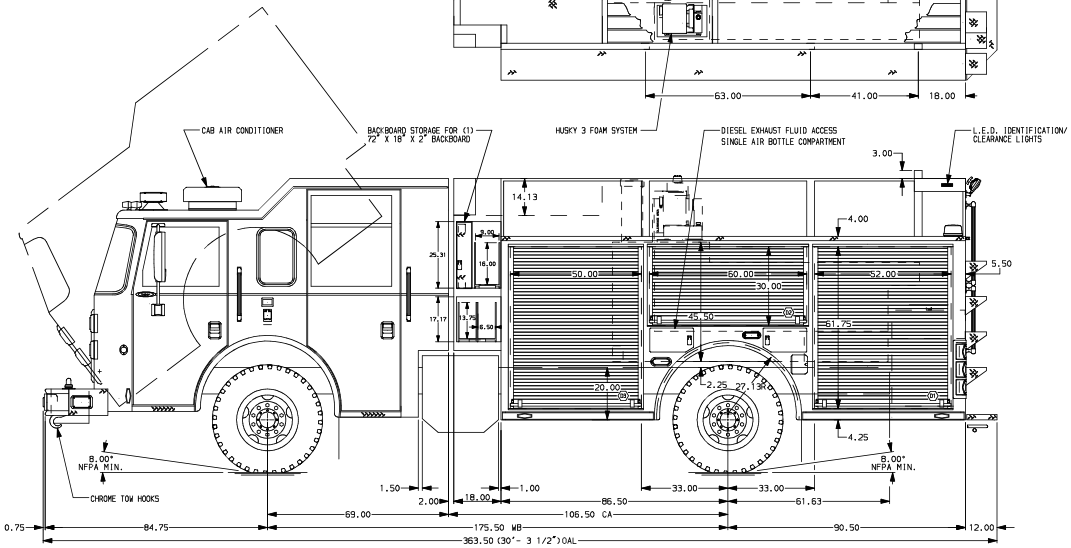

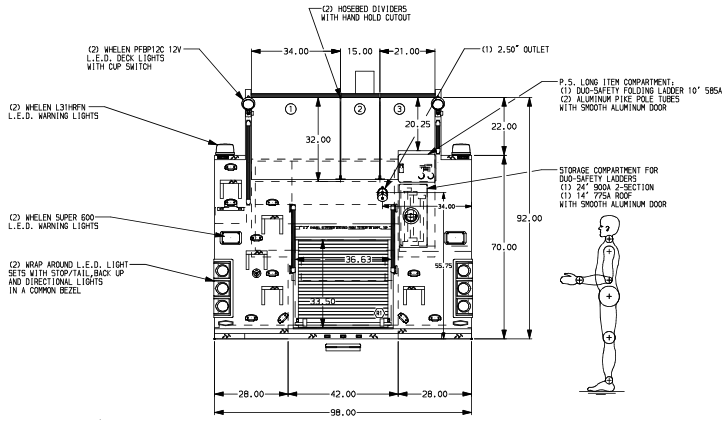

ALUMINUM BODY

NOTE

DIMENSIONS SHOWN ARE APPROXIMATE AND ARE SUBJECT TO MINOR DEVIATIONS AS MAY OCCUR OR BE NECESSARY IN CONSTRUCTION.
MINOR DETAILS NOT SHOWN.

1. CTF WHEEL CHOCKS AND MOUNTING BRACKETS
2. BATTERY CHARGER LOCATED IN COMPARTMENT D3
3. BATTERY CHARGER INDICATOR ON DRIVER'S SIDE OF CAB ABOVE SHORELINE RECEPTACLE
4. SHORELINE 120V RECEPTACLE WITH KUSSMAUL AUTO EJECT ON DRIVER'S SIDE OF CAB ABOVE WHEEL WELL
5. PERIMETER SCENE LIGHTS LOCATED PER SHOP ORDER
6. PIERCE L.E.D. COMPARTMENT LIGHT STRIPS LOCATED PER SHOP ORDER
7. AIR INLET WITH DISCONNECT COUPLING IN DRIVER'S STEP WELL
8. ONE ADJUSTABLE FULL WIDTH/FULL DEPTH SHELF IN COMPARTMENTS D1, D3, P1, P3 AND R1

CUSTOMER APPROVAL

APPROVED BY: _____

DATE: _____

REV	DATE	BY	CH
V	05DEC12	SBU	COR

CHASSIS DATA
MAKE: PIERCE
MODEL: SABER

Pierce MANUFACTURING INC.

TITLE: 1500-D-750, FOAM TANK, 177 PUMPER BODY, CROSSLAYS BACKBOARD STORAGE, LADDERS NEXT TO TANK, DELUGE

FOR: PIERCE FIELD UNIT
APPLETON, WI

DWG NO. 26181AD

JOB NO.	26181
SCALE 1:24	DATE
DRAWN BY JRO	245EP12
CHECKED BY BZI	245EP12
SHEET SIZE D	SHEET NO. 1 OF 1