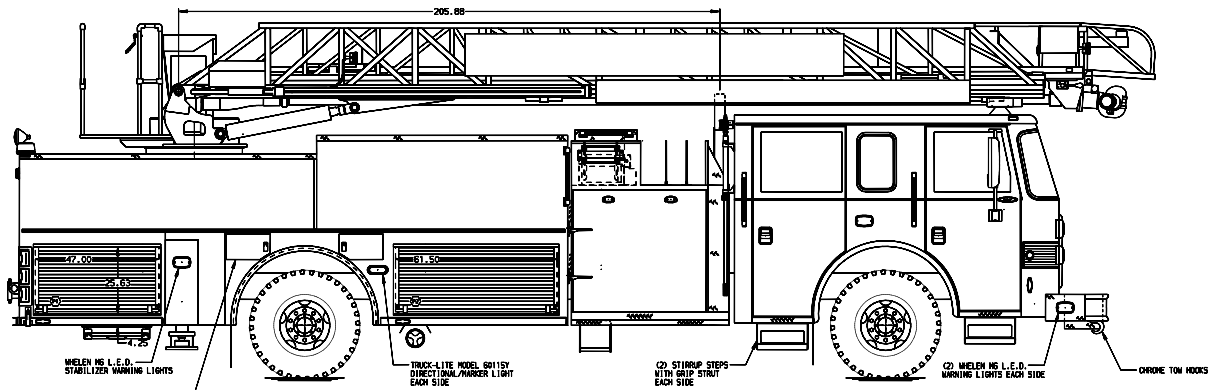

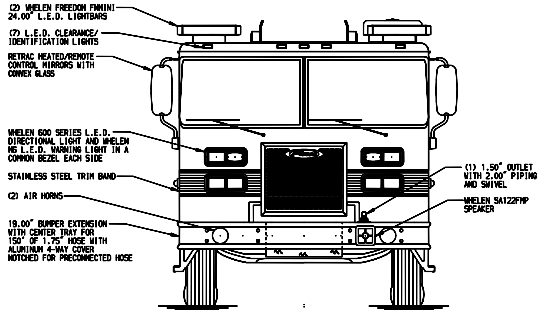

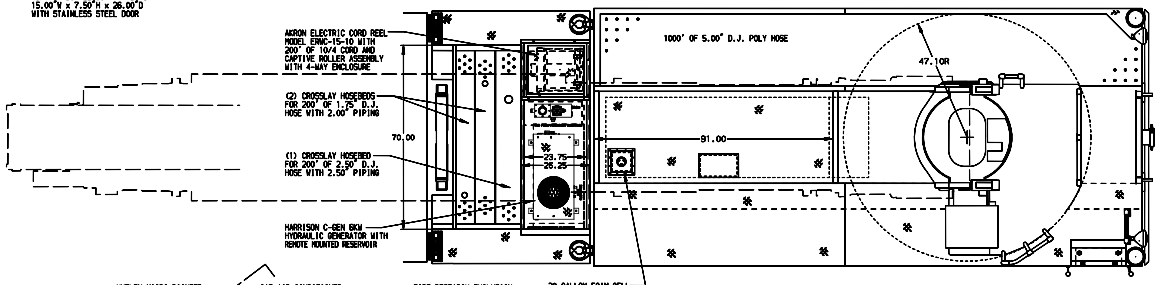

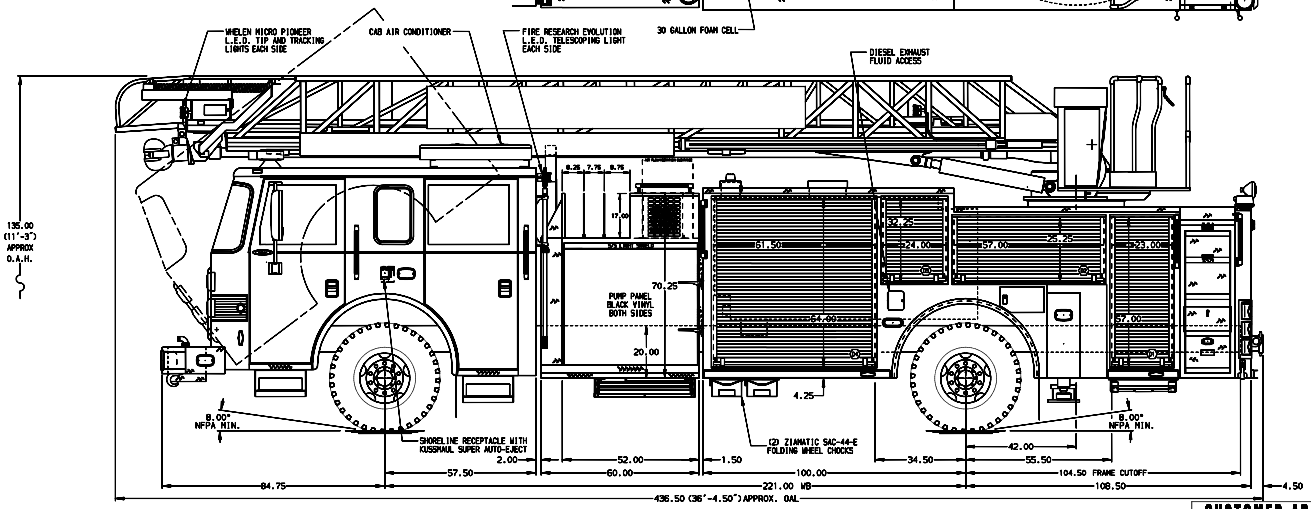

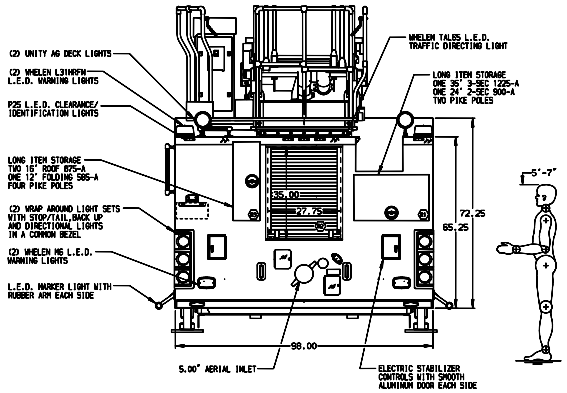

ALUMINUM BODY

NOTE

DIMENSIONS SHOWN ARE APPROXIMATE AND ARE SUBJECT TO MINOR DEVIATIONS AS MAY OCCUR OR BE NECESSARY IN CONSTRUCTION.
MINOR DETAILS NOT SHOWN.

1. CIRCUIT BREAKER PANEL IN COMPARTMENT D4
2. BATTERY CHARGER LOCATED IN COMPARTMENT D4
3. ONE ADJUSTABLE FULL WIDTH/FULL DEPTH SHELF IN COMPARTMENTS D1,D2,D4
4. ONE FLOOR MOUNTED SLIDE-OUT TRAY IN COMPARTMENT D4
5. PIERCE L.E.D. COMPARTMENT LIGHT STRIPS LOCATED PER SHOP ORDER
6. PERIMETER SCENE LIGHTS LOCATED PER SHOP ORDER
7. 120V POWER TO AERIAL TIP
8. 1500 GPM HIGH FLOW WATERWAY
9. TRIDENT FOLDING STEPS MOUNTED ON THE AERIAL DEVICE PER SHOP ORDER
10. 2-WAY INTERCOM SYSTEM BETWEEN AERIAL TIP AND TURNTABLE
11. AIR INLET WITH DISCONNECT COUPLING RECESSED IN ALUMINUM 4-WAY BOX AT DS STEP WELL
12. L.E.D. ROPE LIGHTING ON AERIAL DEVICE
13. ALL FOLDING STEPS ON BODY ARE TRIDENT WITH INTEGRATED L.E.D. LIGHT UNLESS SPECIFIED

REV	DATE	BY	CH
2	21MAR13	SHU	SHE
1	06MAR13	SHU	GRM

CUSTOMER APPROVAL
APPROVED BY: _____
DATE: _____

CHASSIS DATA	
MAKE	PIERCE
MODEL	SABER

PIERCE MANUFACTURING INC.

TITLE: 75' HAL TCO AERIAL LADDER & BODY ASSEMBLY
500 GALLON TANK, 470 GAL WATER, 30 GAL FOAM

FOR: PIERCE STOCK
APPLETON, WI

DWG NO. 26634AD

JOB NO.	26634
SCALE	1:24
DATE	
DRAWN BY	SHU
04MAR13	
CHECKED BY	JBL
05MAR13	
SHEET SIZE	D
SHEET NO.	1 OF 1