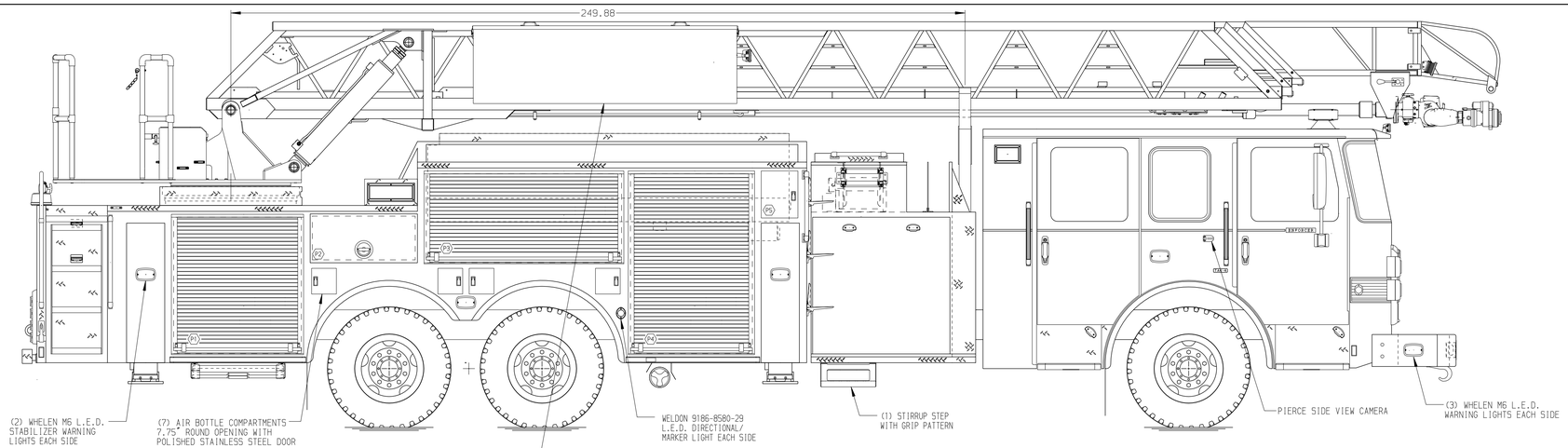

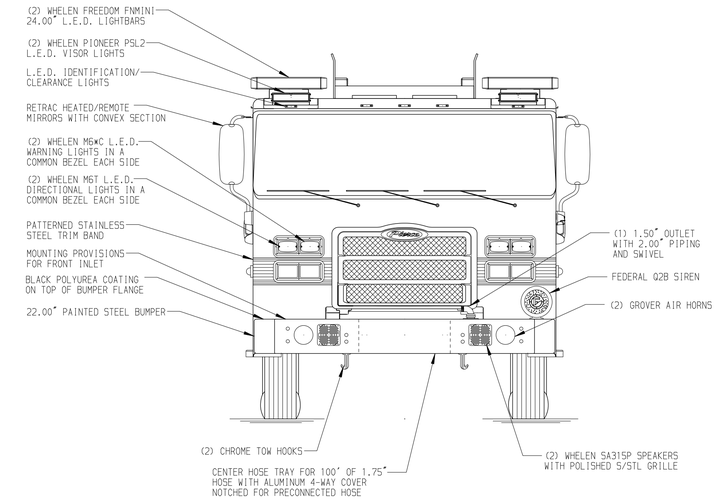

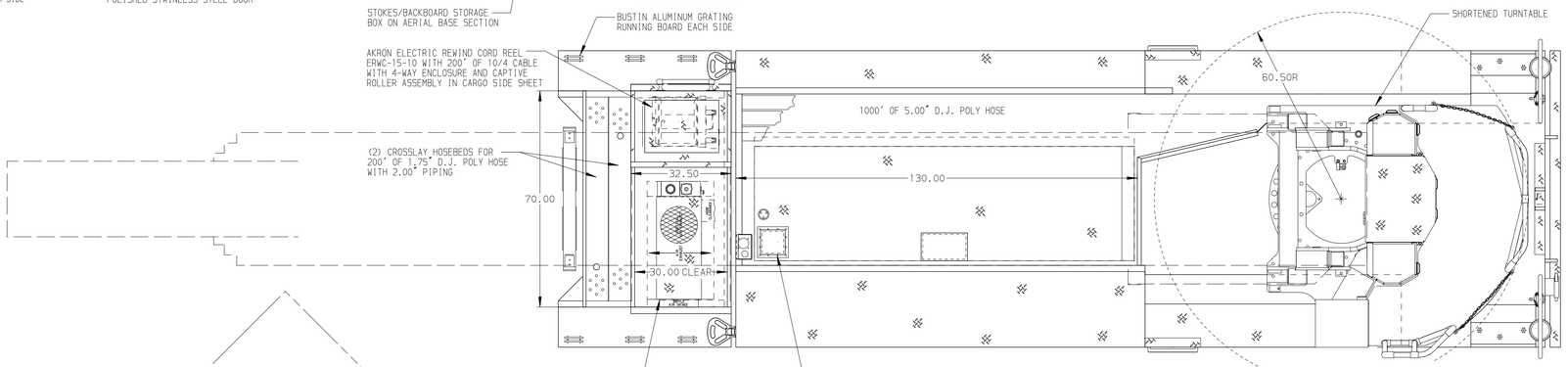

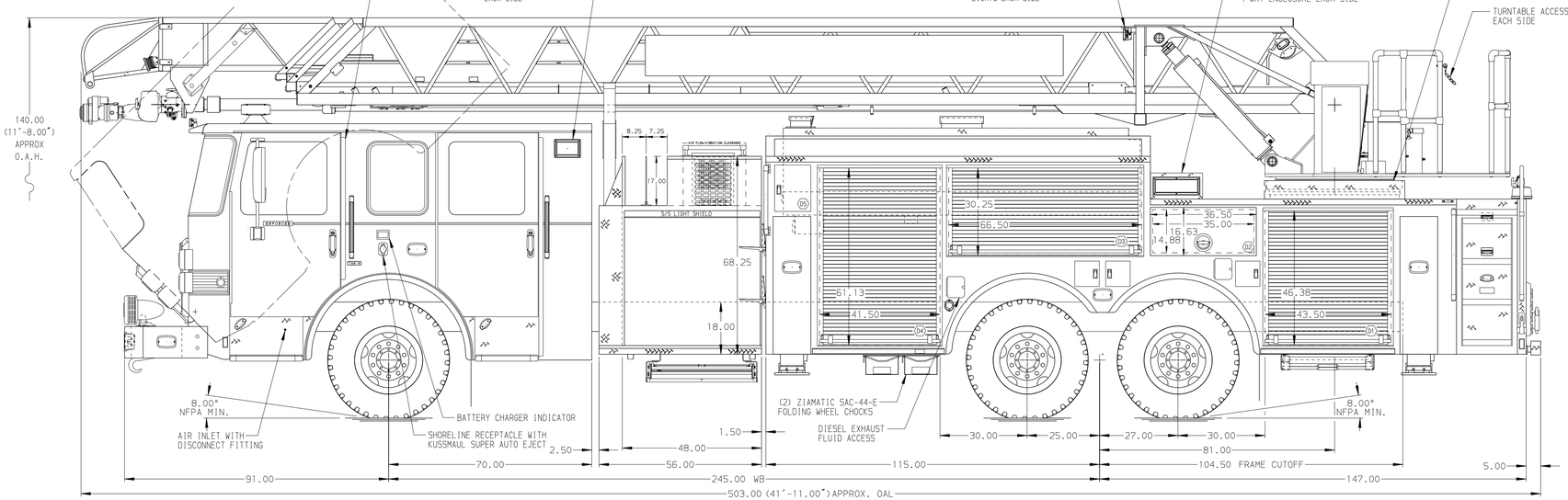

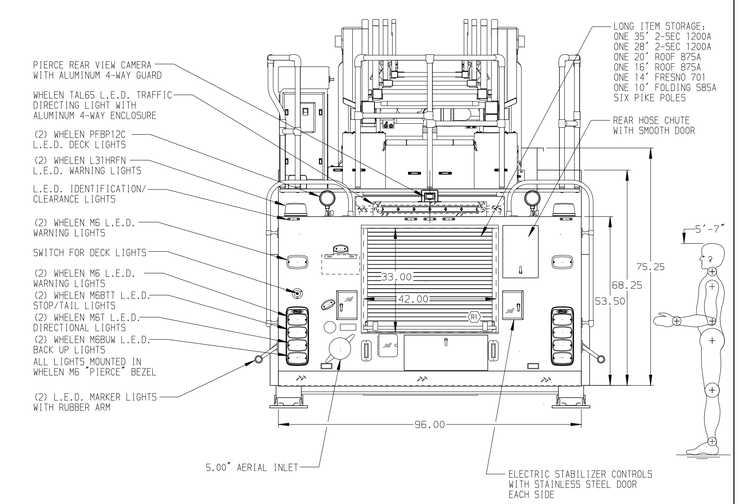

ALUMINUM BODY | SIDE ROLL & FRONTAL IMPACT PROTECTION

Pierce MANUFACTURING INC.

NOTE

DIMENSIONS SHOWN ARE APPROXIMATE AND ARE SUBJECT TO MINOR DEVIATIONS AS MAY OCCUR OR BE NECESSARY IN CONSTRUCTION.
MINOR DETAILS NOT SHOWN.

1. MOUNTING BASE FOR ANTENNA LOCATED PER SHOP ORDER
2. BATTERY CHARGER LOCATED BEHIND DRIVER'S SEAT
3. PERIMETER SCENE LIGHTS LOCATED PER SHOP ORDER
4. S/STL PROTECTIVE GUARD FOR ROLL-UP DOOR IN COMPARTMENT D1,D3,D4,P1,P3,P4
5. PIERCE L.E.D. DUAL LIGHT STRIPS IN COMPARTMENTS PER SHOP ORDER
6. PAINTED SHELF TRACKS LOCATED IN COMPARTMENTS PER SHOP ORDER
7. ONE 500 LB. FULL WIDTH/DEPTH ADJUSTABLE PAINTED SHELF IN COMPARTMENT D1,D4,P1,P3,P4
8. ONE 500 LB. FLOOR MOUNTED SLIDE-OUT TRAY WITH 2" SIDES IN COMPARTMENT D1,D4,P1,P4
9. ONE 215 LB. ADJUSTABLE TILT/SLIDE-OUT TRAY IN COMPARTMENT D3
10. PLUMBING FOR FUTURE HUSKY 3/12 FOAM SYSTEM
11. CIRCUIT BREAKER PANEL IN COMPARTMENT D5
12. EBERHARD FOLDING STEPS MOUNTED ON AERIAL DEVICE PER SHOP ORDER
13. 120V POWER TO AERIAL TIP
14. LIFTING EYE RESCUE ATTACHMENT AT AERIAL TIP
15. STABILIZERS MODIFIED FOR 18.00" GROUND PENETRATION
16. L.E.D. LIGHTING ON AERIAL LADDER SECTIONS
17. 2-WAY INTERCOM SYSTEM BETWEEN AERIAL TIP AND TURNTABLE
18. COLLISION AVOIDANCE CONTROL SYSTEM ON AERIAL DEVICE
19. 21" LIMITED RETRACTION
20. AERIAL PEDESTAL RAISED 3.00"

REV	DATE	BY	CH
1	01JUN15	SHU	ANG
2	08MAY15	SHU	JCO
3	08APR15	SHU	GRM

CHASSIS DATA
MAKE: PIERCE
MODEL: ENFORCER

TITLE: 105' HSL AERIAL LADDER AND BODY ASSEMBLY
520 GALLON NOTCHED TANK,500 GAL. WATER/20 GAL. FOAM

FOR: PIERCE MANUFACTURING
APPLETON, WI

DWG NO.: 28785AD

JOB NO.	28785
SCALE	1:24
DATE	
DRAWN BY	SHU 30MAR15
CHECKED BY	GRM 31MAR15
SHEET SIZE	D
SHEET NO.	1 OF 1

View File Created 02-JUN-2015 09:18:05