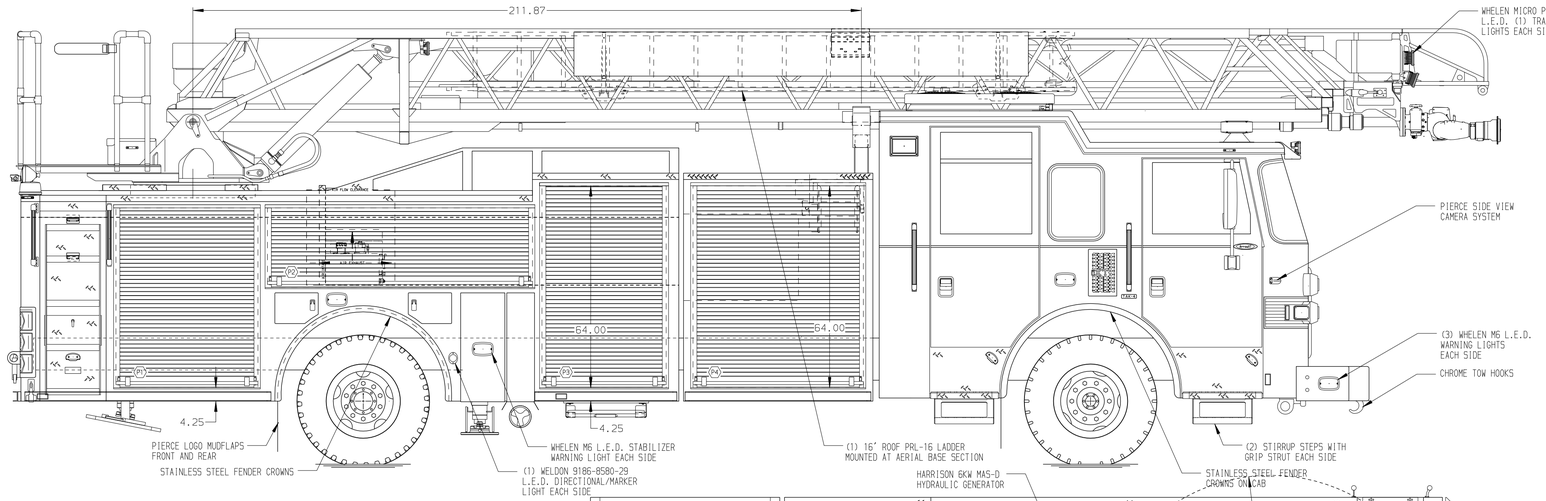

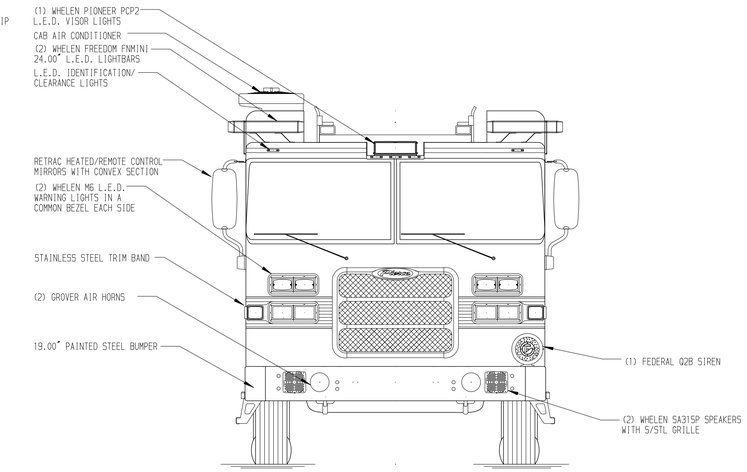

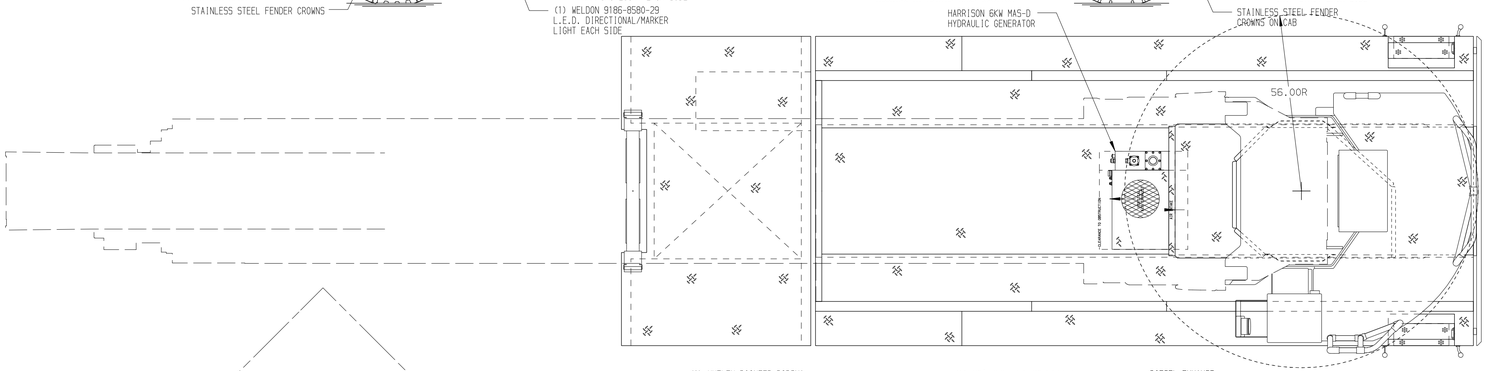

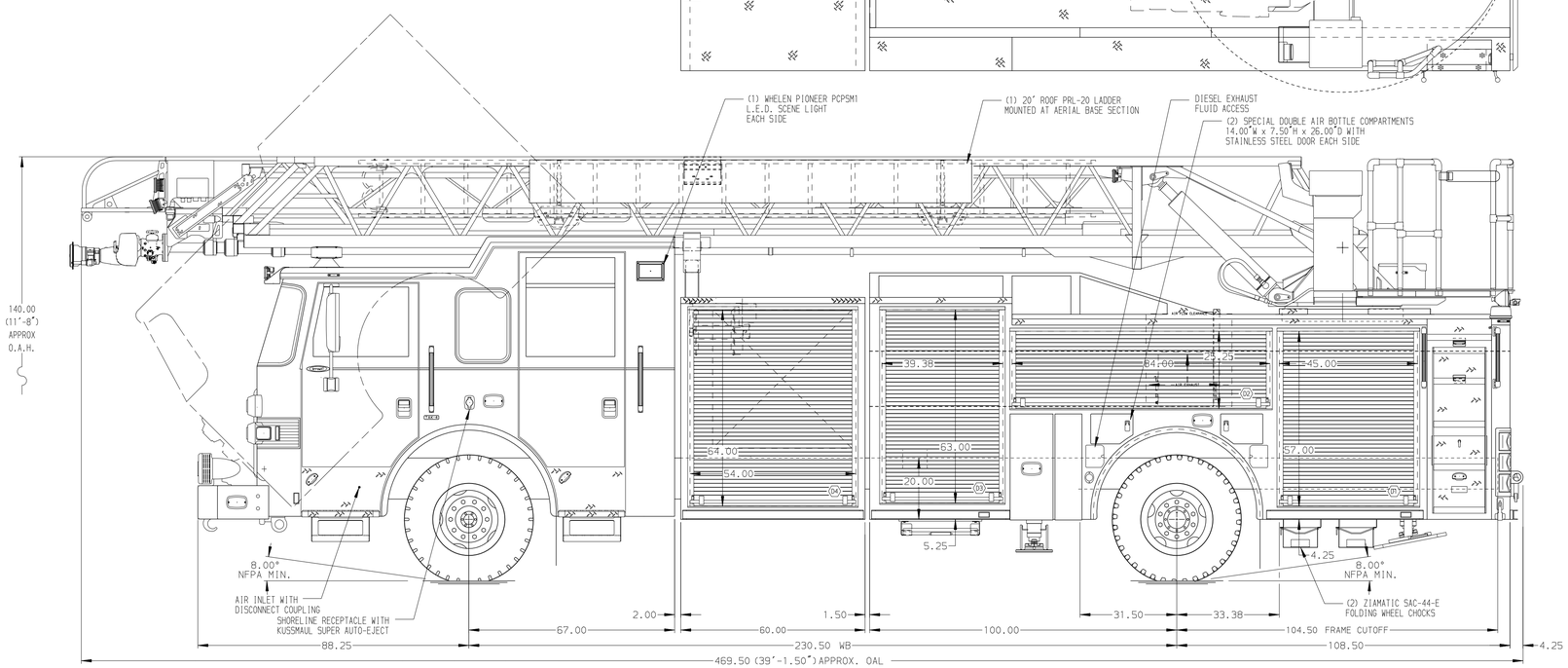

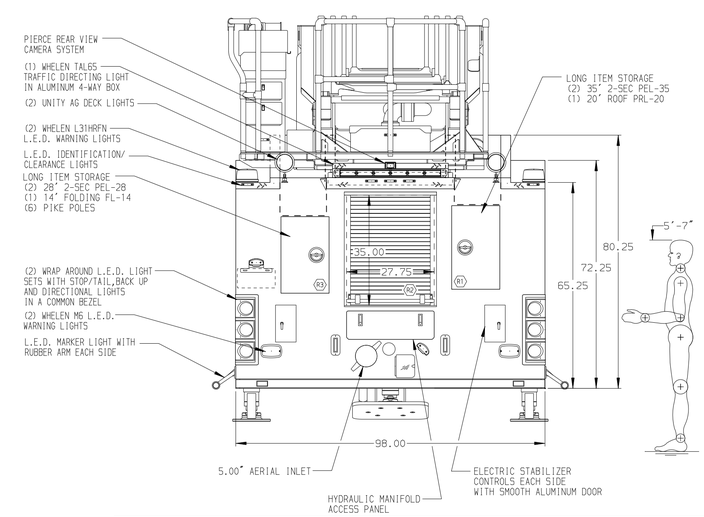

ALUMINUM BODY

SIDE ROLL AND FRONTAL IMPACT PROTECTION

NOTE

DIMENSIONS SHOWN ARE APPROXIMATE AND ARE SUBJECT TO MINOR DEVIATIONS AS MAY OCCUR OR BE NECESSARY IN CONSTRUCTION.
MINOR DETAILS NOT SHOWN.

1. BATTERY CHARGER LOCATED IN CREW CAB SEAT RISER
2. BATTERY CHARGER INDICATOR LOCATED NEAR D.S. SEAT RISER WITH BRACKET
3. PIERCE L.E.D. COMPARTMENT DUAL LIGHT STRIPS LOCATED PER SHOP ORDER
4. ONE ADJUSTABLE FULL WIDTH/FULL DEPTH SHELF IN COMPARTMENTS D1,D2,D3,P1,P2,P3
5. ONE FLOOR MOUNTED SLIDE-OUT TRAY IN COMPARTMENTS D1,D3,P1,P3
6. ONE ADJUSTABLE UTILITY 1-WAY SLIDE-OUT TRAY IN COMPARTMENT D4,P4
7. S/STL SCUFFPLATE ON EACH CAB DOOR JAMB
8. TRIDENT FOLDING STEPS MOUNTED ON AERIAL DEVICE PER SHOP ORDER
9. L.E.D. LIGHTING ON AERIAL LADDER SECTIONS
10. 120V DUPLEX RECEPTACLE AT THE AERIAL TIP
11. 2-WAY INTERCOM SYSTEM BETWEEN AERIAL TIP AND TURNTABLE
12. NON-RAISED AERIAL PEDESTAL
13. LIFTING EYE RESCUE ATTACHMENT AT AERIAL TIP
14. 1500 GPM HIGH FLOW WATERWAY
15. BATTERY CHARGE INDICATOR LOCATED NEAR D.S. SEAT RISER WITH BRACKET
16. PERIMETER SCENE LIGHTS LOCATED PER SHOP ORDER
17. CIRCUIT BREAKER PANEL IN COMPARTMENT D3
18. LYFEPULLEY RESCUE SYSTEM AT AERIAL TIP
19. ONE AKRON ELECTRIC REWIND CORD REEL MODEL ERWC-15-10 LOCATED IN COMPARTMENT D4,P4 WITH 200' OF 10/4 CABLE

REV	DATE	BY	CH
3	30OCT15	JGA	THS
2	11SEP15	JGA	THS

CHASSIS DATA
MAKE: PIERCE
MODEL: ARROW XT

Pierce MANUFACTURING INC.

TITLE: 107' ASCENDANT HSL AERIAL LADDER AND BODY ASSEMBLY NO PUMP/NO TANK
FOR: PIERCE FIELD UNIT APPLETON, WI
DWG NO.: 29364AD

JOB NO.	SCALE	DRAWN BY	CHECKED BY	SHEET SIZE	SHEET NO.
29364	1:24	JGA	GRM	D	1 OF 1

DATE: 04AUG15
05AUG15

View File Created 30-OCT-2015 15:19:26